MITSUBISHI ELECTRIC

LCD PROJECTOR

MODEL

HC5000

User Manual

HDMI™
HIGH-DEFINITION MULTIMEDIA INTERFACE

HD ready

HC5000

This User Manual is important to you.
Please read it before using your projector.

CAUTION

RISK OF ELECTRIC SHOCK
DO NOT OPEN

CAUTION: TO REDUCE THE RISK OF ELECTRIC SHOCK, DO NOT REMOVE COVER (OR BACK)
NO USER-SERVICEABLE PARTS INSIDE
REFER SERVICING TO QUALIFIED SERVICE PERSONNEL.

The lightning flash with arrowhead symbol within an equilateral triangle is intended to alert the user to the presence of uninsulated “dangerous voltage” within the product’s enclosure that may be of sufficient magnitude to constitute a risk of electric shock.

The exclamation point within an equilateral triangle is intended to alert the user to the presence of important operating and maintenance (servicing) instructions in the literature accompanying the appliance.

WARNING:
TO PREVENT FIRE OR SHOCK HAZARD, DO NOT EXPOSE THIS APPLIANCE TO RAIN OR MOISTURE.

CAUTION:
TO PREVENT ELECTRIC SHOCK, DO NOT USE THIS (POLARIZED) PLUG WITH AN EXTENSION CORD, RECEPTACLE OR OTHER OUTLET UNLESS THE BLADES CAN BE FULLY INSERTED TO PREVENT BLADE EXPOSURE.

NOTE:
SINCE THIS PROJECTOR IS PLUGGABLE EQUIPMENT, THE SOCKET-OUTLET SHALL BE INSTALLED NEAR THE EQUIPMENT AND SHALL BE EASILY ACCESSIBLE.

WARNING
Use the attached specified power supply cord. If you use another power supply cord, it may cause interference with radio and television reception.

Use the attached RGB cable and RS-232C cable with this equipment so as to keep interference within the limit of a FCC Class B device.

This apparatus must be grounded.

DO NOT LOOK DIRECTLY INTO THE LENS WHEN THE PROJECTOR IS IN THE POWER ON MODE.

CAUTION
Not for use in a computer room as defined in the Standard for the Protection of Electronic Computer/ Data Processing Equipment, ANSI/NFPA 75.

When using the projector in Europe:
COMPLIANCE NOTICE
This Projector complies with the requirements of the EC Directive 89/336/EEC “EMC Directive” as amended by Directive 92/31/EEC and 93/68/EEC, and 73/23/ EEC “Low Voltage Directive” as amended by Directive 93/68/EEC.

The electro-magnetic susceptibility has been chosen at a level that gains proper operation in residential areas, on business and light industrial premises and on small-scale enterprises, inside as well as outside of the buildings. All places of operation are characterised by their connection to the public low voltage power supply system.

WARNING
Use the attached RGB cable and RS-232C cable with this equipment so as to keep interference within the limits of an EN55022 Class B device.
Please follow WARNING instructions.

Contents

Important safeguards 4
Preparing your projector 6
Using the remote control 9
Setting up your projector 10
Viewing video images 13
Viewing computer images 21
Menu operation 24
Adjusting projected images 30
Advanced features 34
Replacing the lamp 35
Maintenance 37
Troubleshooting 38
Indicators 41
Specifications 42

Note: This symbol mark is for EU countries only.
This symbol mark is according to the directive 2002/96/EC Article 10 Information for users and Annex IV.

Your MITSUBISHI ELECTRIC product is designed and manufactured with high quality materials and components which can be recycled and reused.

This symbol means that electrical and electronic equipment, at their end-of-life, should be disposed of separately from your household waste.

Please, dispose of this equipment at your local community waste collection/recycling centre.

In the European Union there are separate collection systems for used electrical and electronic product.

Please, help us to conserve the environment we live in!

Declaration of Conformity

Model number:	HC5000
Trade name:	MITSUBISHI ELECTRIC
Responsible party:	Mitsubishi Digital Electronics America, Inc. 9351 Jeronimo Road, Irvine, CA 92618 U.S.A
Telephone number:	+1-(949) 465-6000

This device complies with Part 15 of the FCC Rules. Operation is subject to the following two conditions:
(1) this device may not cause harmful interference, and
(2) this device must accept any interference received, including interference that may cause undesired operation.

Trademark, Registered trademark

Macintosh is registered trademark of Apple Computer Inc.
HDMI, the HDMI logo and High-Definition Multimedia Interface are trademarks or registered trademarks of HDMI Licensing LLC.
The “HD ready” logo is a trademark of EICTA.
Other brand or product names are trademarks or registered trademarks of their respective holders.

Important safeguards

Please read all these instructions regarding your projector and retain them for future reference. Follow all warnings and instructions marked on the projector.

1. Read instructions
   All the safety and operating instructions should be read before the appliance is operated.
2. Retain instructions
   The safety and operating instructions should be retained for future reference.
3. Warnings
   All warnings on the appliance and in the operating instructions should be adhered to.
4. Instructions
   All operating instructions must be followed.
5. Cleaning
   Unplug this projector from the wall outlet before cleaning it. Do not use liquid aerosol cleaners. Use a damp soft cloth for cleaning.
6. Attachments and equipment
   Never add any attachments and/or equipment without the approval of the manufacturer as such additions may result in the risk of fire, electric shock or other personal injury.
7. Water and moisture
   Do not use this projector near water or in contact with water.
8. Accessories
   Do not place this projector on an unstable cart, stand, tripod, bracket or table. Use only with a cart, stand, tripod, bracket, or table recommended by the manufacturer or sold with the projector. Any mounting of the appliance should follow the manufacturer's instructions and should use a mounting accessory recommended by the manufacturer.

   An appliance and cart combination should be moved with care. Quick stops, excessive force and uneven surfaces may cause the appliance and cart combination to overturn.
9. Ventilation
   Slots and openings in the cabinet are provided for ventilation, ensuring reliable operation of the projector and to protect it from overheating. Do not block these openings or allow them to be blocked by placing the projector on a bed, sofa, rug, or bookcase. Ensure that there is adequate ventilation and that the manufacturer's instructions have been adhered to.
10. Power sources
    This projector should be operated only from the type of power source indicated on the marking label. If you are not sure of the type of power, please consult your appliance dealer or local power company.
11. Power-cord protection
    Power-supply cords should be routed so that they are not likely to be walked on or pinched by items placed upon or against them. Pay particular attention to cords at plugs, convenience receptacles, and points where they exit from the appliance. Do not put the power cord under a carpet.
12. Overloading
    Do not overload wall outlets and extension cords as this can result in a fire or electric shock.
13. Objects and liquids
    Never push objects of any kind through openings of this projector as they may touch dangerous voltage points or short-out parts that could result in a fire or electric shock. Never spill liquid of any kind on the projector.
14. Servicing
    Do not attempt to service this projector by yourself. Refer all servicing to qualified service personnel.
15. Damage requiring service
    Unplug this projector from the wall outlet and refer servicing to qualified service personnel under the following conditions:
    (a) If the power-supply cord or plug is damaged.
    (b) If liquid has been spilled, or objects have fallen into the projector.
    (c) If the projector does not operate normally after you follow the operating instructions. Adjust only those controls that are covered by the operating instructions. An improper adjustment of other controls may result in damage and may often require extensive work by a qualified technician to restore the projector to its normal operation.
    (d) If the projector has been exposed to rain or water.
    (e) If the projector has been dropped or the cabinet has been damaged.
    (f) If the projector exhibits a distinct change in performance - this indicates a need for service.
16. Replacement parts
    When replacement parts are required, be sure that the service technician has used replacement parts specified by the manufacturer or parts having the same characteristics as the original part. Unauthorized substitutions may result in fire, electric shock or other hazards.
17. Safety check
    Upon completion of any service or repair to this projector, ask the service technician to perform safety checks determining that the projector is in a safe operating condition.

WARNING:

Unplug immediately if there is something wrong with your projector.
Do not operate if smoke, strange noise or odor comes out of your projector. It might cause fire or electric shock. In this case, unplug immediately and contact your dealer.

Never remove the cabinet.
This projector contains high voltage circuitry. An inadvertent contact may result in an electric shock. Except as specifically explained in the User Manual do not attempt to service this product by yourself. Please contact your dealer when you want to fix, adjust or inspect the projector.

Do not modify this equipment.
It can lead to fire or electric shock.

Do not keep using the damaged projector.
If the projector is dropped and the cabinet is damaged, unplug the projector and contact your dealer for inspection. It may lead to fire if you keep using the damaged projector.

Do not face the projector lens to the sun.
It can lead to fire.

Use correct voltage.
If you use incorrect voltage, it can lead to fire.

Do not place the projector on uneven surface.
Place the projection on a leveled and stable surface only. Please do not place equipment on unstable surfaces.

Do not look into the lens when it is operating.
It may hurt your eyes. Never let children look into the lens when it is on.

Do not unplug the power cord during operation.
It can lead to lamp breakage, fire, electric shock or other trouble. It is best to wait for the fan to turn off before turning the main power off.

Do not touch the air outlet grille and bottom plate, which become hot.
Do not touch them or put other equipment in front of the air outlet grille. The air outlet grille and bottom plate, when heated, may cause injury or damage to other equipment. Also, do not set the projector on the desk which is easily affected by heat.

Do not look into the air outlet grille when projector is operating.
Heat, dust, etc. may blow out of it and hurt your eyes.

Do not block the air inlet and outlet grilles.
If they are blocked, heat may be generated inside the projector, causing deterioration in the projector quality and fire.

Do not use flammable solvents (benzene, thinner, etc.) and flammable aerosols near the projector.
Flammable substances may ignite causing fire or breakdown because the temperature inside the projector rises very high while the lamp is illuminating.

Place of installation
For safety's sake, refrain from setting the projector at any place subjected to high temperature and high humidity. Please maintain an operating temperature, humidity, and altitude as specified below.

- Operating temperature: between +41°F (+5°C) and +95°F (+35°C)
- Operating humidity: between 30% and 90%
- Never put any heat-producing device under the projector so that the projector does not overheat.
- Do not attach the projector to a place that is unstable or subjected to vibration.
- Do not install the projector near any equipment that produces a strong magnetic field. Also refrain from installing near the projector any cable carrying a large current.
- Place the projector on a solid, vibration free surface; otherwise it may fall, causing serious injury to a child or adult, and serious damage to the product.
- Do not stand the projector; it may fall, causing serious injury and damage to the projector.
- Slanting the projector more than ±10°(right and left) or ±15°(front and rear) may cause trouble or explosion of the lamp.
- Do not place the projector near air-conditioning unit or heater to avoid hot air to the exhaust and ventilation hole of the projector.

COMPLIANCE NOTICE OF FCC

This equipment has been tested and found to comply with the limits for a Class B digital device, pursuant to Part 15 of the FCC Rules. These limits are designed to provide reasonable protection against harmful interference in a residential installation. This equipment generates, uses and can radiate radio frequency energy and, if not installed and used in accordance with the instructions, may cause harmful interference to radio communications. However, there is no guarantee that interference will not occur in a particular installation. If this equipment does cause harmful interference to radio or television reception, which can be determined by turning the equipment off and on, the user is encouraged to try to correct the interference by one or more of the following measures:

- Reorient or relocate the receiving antenna.
- Increase the separation between the equipment and receiver.
- Connect the equipment into an outlet on a circuit different from that to which the receiver is connected.
- Consult the dealer or an experienced Radio/TV technician for help.

Changes or modifications not expressly approved by Mitsubishi could void the user's authority to operate this equipment.

COMPLIANCE NOTICE OF INDUSTRY CANADA

This Class B digital apparatus complies with Canadian ICES-003.

Preparing your projector

Checking accessories

The following accessories are provided with this projector. Check to be sure that all of the accessories are packed in the package.

■ Cables

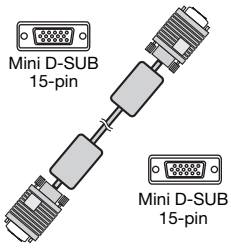

RGB cable for PC
(246C521-10)

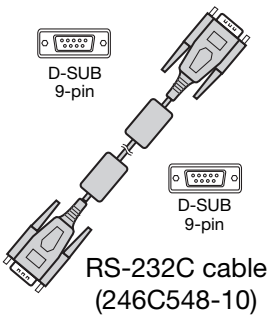

RS-232C cable
(246C548-10)

- Used for projector control by computer.

■ Power supply parts

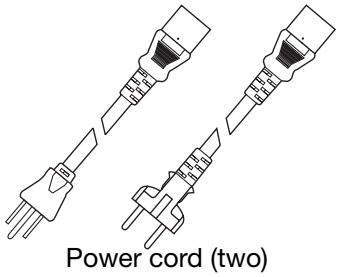

Power cord (two)
(246C483-10, 246C383-20)

■ Remote control parts

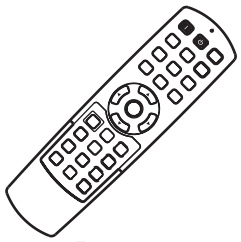

Remote control
(290P150-10)

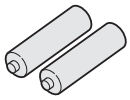

R6P (Size-AA)
battery (two)

■ Others

- Lens cap (attached to the projector)
- Lamp replacement tray (857C106-10)
- User Manual/Quick Start up (English only) (871D494-10)
- CD-ROM (with User Manual) (919C133-70)
- Safety Manual/Quick Start up (871D393-70)

Important:

- The attached power cords are to be used exclusively for this product. Never use them for other products.

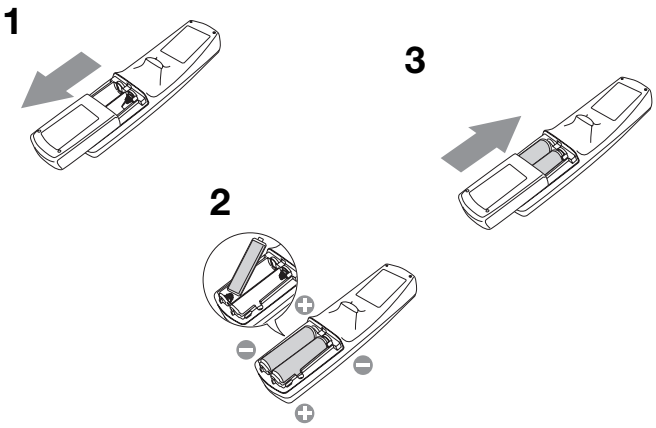

Inserting the batteries into the remote control

1. Remove the back lid of the remote control.
2. Check the polarity (+), (-) of the batteries, and set them correctly, inserting their (-) side first.
   - If the battery is inserted from the (+) side first, inserting the (-) side is difficult because the coil spring end hits on the battery side. If the battery is forced in this way, the outer label of the battery may get ripped and it may cause a short-circuit and heating.
3. Attach the back lid.

Important:

- Use two size-AA batteries (R6P).
- Replace the two batteries with new ones when the remote control is slow to respond.

Caution:

- Use of a battery of wrong type may cause explosion.
- Only Carbon-Zinc or Alkaline-Manganese Dioxide type batteries should be used.
- Dispose of used batteries according to your local regulations.
- Batteries may explode if misused. Do not recharge, disassemble, or throw them in fire.
- Be sure to handle the batteries according to the instructions.
- Load the batteries with its positive (+) and negative (-) sides correctly oriented as indicated on the remote control.
- Keep batteries out of reach of children and pets.
- Remove the batteries, if the remote control is not used for a long time.
- Do not combine a new battery with an old one.
- If the solution of batteries comes in contact with your skin or clothes, rinse with water. If the solution comes in contact with your eyes, rinse them with water and then consult your doctor.

Overview

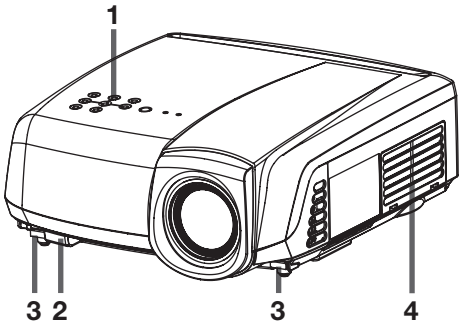

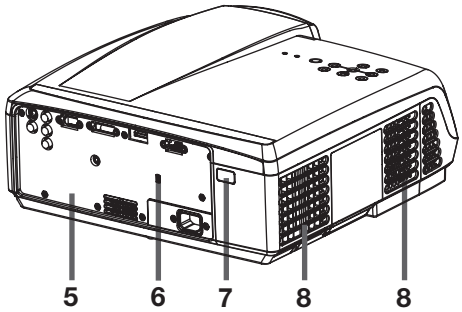

1 **Control area**
2 **Remote control sensor (Front)**
3 **Foot adjustment buttons (Left/Right)**
4 **Air inlet grille**
5 **Terminal board**
6 **Kensington Security Lock Standard connector**
7 **Remote control sensor (Rear)**
8 **Air outlet grille**

Control area

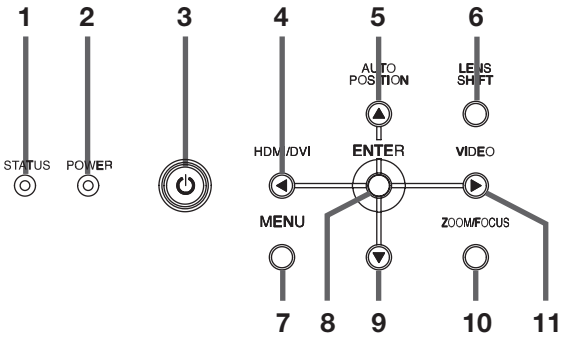

1 **STATUS indicator**
2 **POWER indicator**
3 **POWER button**
4 **HDMI/DVI/◀ button**
5 **AUTO POSITION/▲ button**
6 **LENS SHIFT button**
7 **MENU button**
8 **ENTER button**
9 **▼ button**
10 **ZOOM/FOCUS button**
11 **VIDEO/▶ button**

Important:
- While the menu or the screen for password entry is being displayed, the HDMI/DVI, VIDEO, and AUTO POSITION buttons function as the ◀, ▶, and ▲ buttons respectively.

Terminal panel

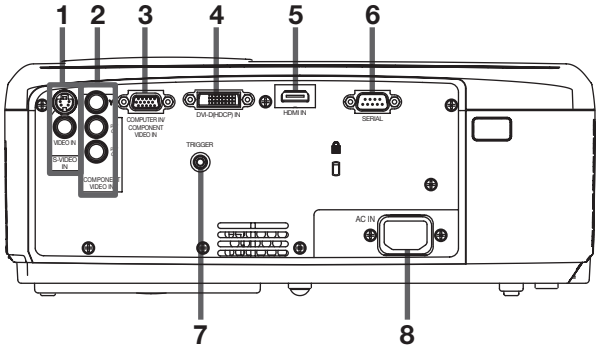

1 **VIDEO IN and S-VIDEO IN terminals**
2 **COMPONENT VIDEO IN terminals**
3 **COMPUTER IN/COMPONENT VIDEO IN terminal (Mini D-SUB 15-pin)**
4 **DVI-D(HDCP) IN terminal**
5 **HDMI IN terminal (HDMI 19-pin)**
6 **SERIAL terminal (D-SUB 9-pin)**
   - Used for projector control by computer. Contact your dealer for details.
7 **TRIGGER terminal**
   - Used for the optional electric screen.
8 **Power jack**

Bottom side

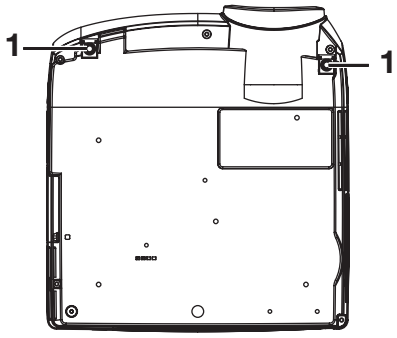

1 Adjustment feet

Remote control

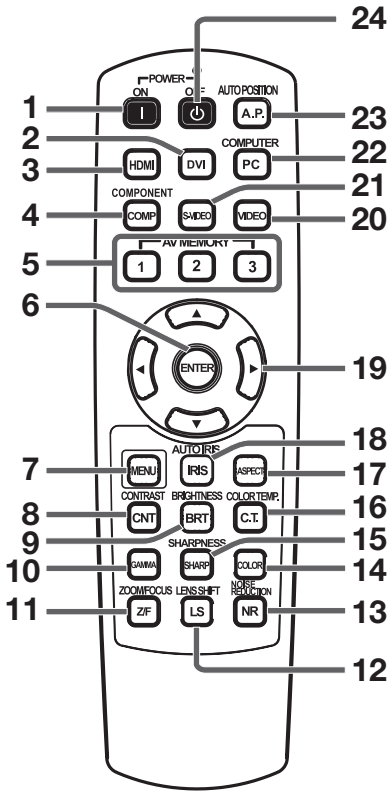

1 ON (I) button
2 DVI button
3 HDMI button
4 COMPONENT button
5 AV MEMORY buttons
6 ENTER button
7 MENU button
8 CONTRAST button*
9 BRIGHTNESS button*
10 GAMMA button*
11 ZOOM/FOCUS button
12 LENS SHIFT button
13 NOISE REDUCTION button
14 COLOR button*
15 SHARPNESS button*
16 COLOR TEMP button*
17 ASPECT button
18 AUTO IRIS button
19 Direction buttons
20 VIDEO button
21 S-VIDEO button
22 COMPUTER button
23 AUTO POSITION button
24 OFF (⏻) button

* : See below for the picture quality adjusting buttons.

Important:

- When you press any button on the remote control, the buttons on the remote control are lit. Wait approx. 6 seconds after releasing the button to turn them off.
- The direction buttons are used for lens shift adjustment. The ◀ and ▶ buttons are also used for zoom/focus adjustment and fine adjustment.

Using the picture quality adjusting buttons

When you press any of the picture quality adjusting buttons, the screen for adjusting the picture quality appears. Adjust the picture quality by pressing the ◀ and ▶ buttons. The picture quality adjustment can be made alternatively in the IMAGE menu. (See page 25.) Items in the menus are shown in parentheses below.

CONTRAST (CONTRAST) ..... Adjusts the contrast of the projected image.
BRIGHTNESS (BRIGHTNESS) ..... Adjusts the brightness of the projected image.
COLOR TEMP (COLOR TEMP.)..... Selects one of the preset color temperatures. Adjustment of USER mode is also available. (Refer to page 31.)
GAMMA (GAMMA MODE)..... Selects one of the preset gamma mode. Adjustment of USER mode is also available. (Refer to page 32.)
SHARPNESS (SHARPNESS)..... Adjusts the sharpness of the projected image.
COLOR (COLOR)..... Adjusts the color thickness of the projected image.
NOISE REDUCTION ..... Adjusts the TRNR, MNR and BAR of the projected image. (See page 32.)

Using the remote control

Operational range of the remote control

- Keep the remote control photo-sensor out of direct sunlight or fluorescent lamp light.
- Keep the remote control photo-sensor at least 2 m (6 feet) away from fluorescent lamps. Otherwise, the remote control may malfunction.
- If there is an inverter-operated fluorescent lamp near the remote control, the remote control operation may become unstable.
- When you use the remote control too close to the remote control sensor, the remote control may not work correctly.

Front of projector

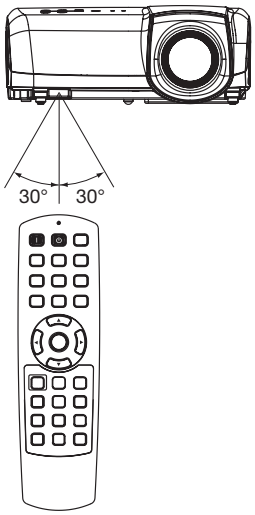

Rear of projector

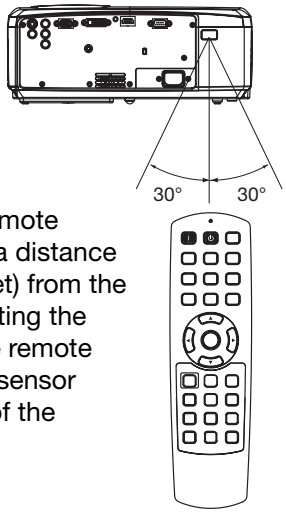

Operate the remote control within a distance of 10 m (30 feet) from the projector, pointing the IR beam at the remote control photo-sensor (front or rear) of the projector.

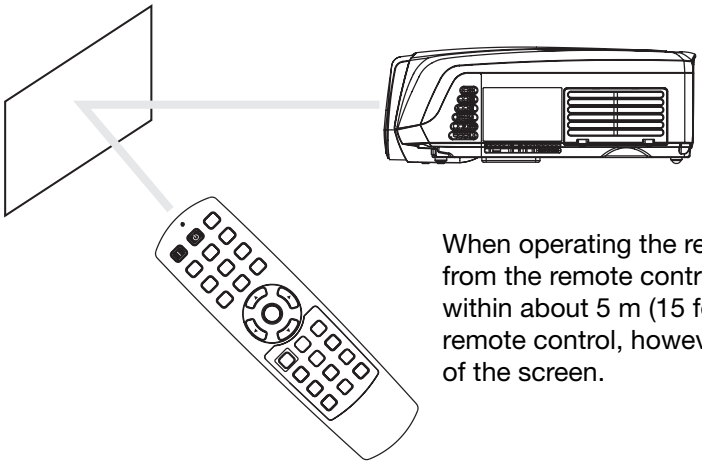

When operating the remote control, keep the distance from the remote control to the projector via the screen within about 5 m (15 feet). The operable range of the remote control, however, depends on the characteristics of the screen.

Reception angle

Vertical directions

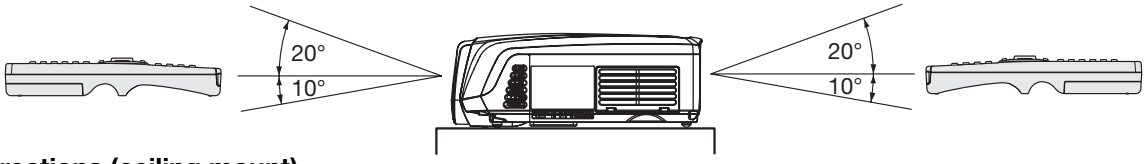

Vertical directions (ceiling mount)

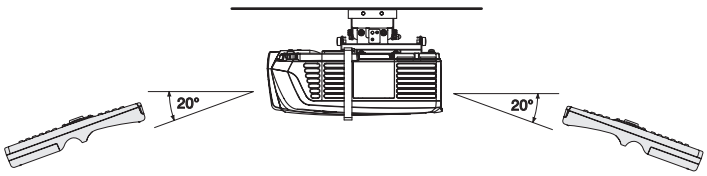

Setting up your projector

Setting up the screen

Install the screen perpendicularly to the projector. If the screen can not be installed in such a way, adjust the projection angle of the projector. (See below.)

- Install the screen and projector so that the projector's lens is placed at the same height and horizontal position of the screen center.
- Do not install the screen where it is exposed to direct sunlight or lighting. Light directly reflecting on the screen makes the projected images washed-out and hard to view.

SCREEN SIZE

You can keep the image display area within the screen by setting SCREEN SIZE in the ADVANCED MENU of IMAGE menu according to the size of the actual screen.
When setting SCREEN SIZE to CINEMA SCOPE(2.35:1):

- CinemaScope size movies are projected in the full screen.
- Set ASPECT in the FEATURE menu to 16:9 when displaying Vista-size images. In this case, they are squeezed horizontally.
- When ASPECT in the FEATURE menu is set to AUTO and 480i/p, 576i/p, 720p, or 1080i signal is input, the part for displaying subtitles is not projected. Then, set SCREEN SIZE to 16:9 and adjust the image position using VERTICAL LOCATION in the ADVANCED MENU of the IMAGE menu. (To display the menu on the screen, adjust SHUTTER(U) in the SIGNAL - USER menu to position the menu.)

Basic setup

Determine the distance from the screen to the projector according to the size of the images to be projected. (See page 12.)

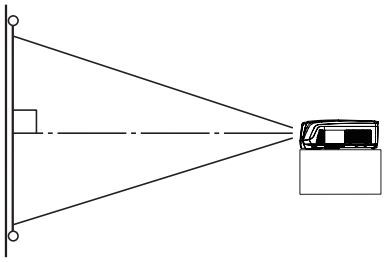

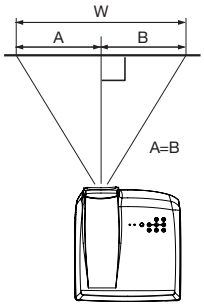

- Depending on the installation conditions, warm air that is emitted from the exhaust vents may flow into the intake vent, causing the projector to display "TEMPERATURE!!" and then stop projecting images.

LENS SHIFT button

To adjust the positions of the projector and the screen, use LENS SHIFT button.

1. Press the LENS SHIFT button.
2. Press the ▲, ▼, ◀ or ▶ button to move the image position.
   - Every time the ▼ button is pressed, the image moves down.
   - Every time the ▲ button is pressed, the image moves up.
   - Every time the ▶ button is pressed, the image moves to the right.
   - Every time the ◀ button is pressed, the image moves to the left.

- When you hold down ▲, ▼ buttons for 2 seconds or longer, the displayed image moves fast in the corresponding directions.
- Be careful not to be caught in the opening in the lens while the lens is moving.
- When the lens is vertically shifted by a large amount, color separation may occur.

Adjusting the projection angle

This projector is provided with two feet for adjusting the projection angle on the bottom surface. Adjust the projection angle depending on the position of the projector.

Adjustment of the projection angle

For the best projection, project images on a flat screen installed at 90 degrees to the floor.
If necessary, tilt the projector using the two adjustment feet on the bottom of the projector.

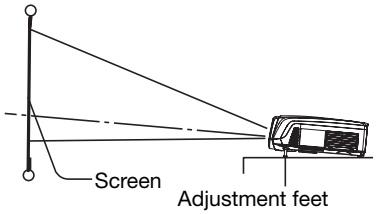

1. Tilt up the projector to the appropriate angle.
2. Press the foot adjustment buttons next to the adjustment feet, and the adjustment feet will come out.
3. Release the buttons to lock the adjustment feet to that position.
4. Rotate the adjustment feet for fine adjustment.

After using the projector:

5. Put the adjustment feet back into the projector by pressing the foot adjustment buttons.

- If necessary, rotate the adjustment feet for fine adjustment.

Front projection, ceiling mounting

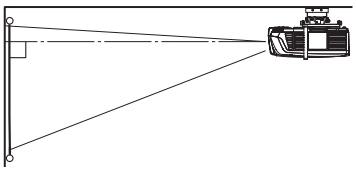

For ceiling mounting, you need the ceiling mount kit designed for this projector. Ask a specialist for installation. For details, consult your dealer.

- The warranty on this projector does not cover any damage caused by use of any non-recommended ceiling mount kit or installation of the ceiling mount kit in an improper location.
- When using the projector mounted on the ceiling, set IMAGE REVERSE in the INSTALLATION menu to MIRROR INVERT. See page 26.
- When the projector is mounted on the ceiling, images may appear darker than those projected in the case of tabletop mounting. This isn't a product malfunction.
- Ask your installation specialist to provide an A/C power switch. When you do not use the projector, be sure to shut down the main power by the switch.
- Do not install the projector where the exhaust vents are exposed to air emitted by an air conditioning. Such installation may cause a breakdown.
- Do not install the projector near a fire alarm because it emits hot air from its exhaust vents.

Rear projection

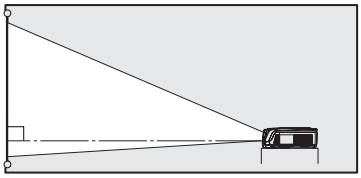

Ask a specialist for installation. For details, consult your dealer.

- For rear projection, set IMAGE REVERSE in the INSTALLATION menu to MIRROR. See page 26.

Caution:

- Placing the projector directly on a carpet impairs ventilation by the fans, causing damage or failure. Put a hard board under the projector to facilitate ventilation.
- Place the projector at least 50 cm (or 20 inch) away from the wall to prevent the air inlet grille and the air outlet grilles that emit hot air from being blocked.
- Do not use the projector in the following locations and manners, which may cause fire or electric shock.
  - In a dusty or humid place.
  - In a sideways position, or with the lens facing down.
  - Near a heater.
  - In an oily, smoky, or damp place such as a kitchen.
  - In direct sunlight.
  - Where the temperature rises high, such as in a closed car.
  - Where the temperature is lower than +41°F (or +5°C) or higher than +95°F (or +35°C).

Important:

- We don't recommend using the projector at an altitude of 1500 meters or higher. Use at an altitude of 1500 meters or higher may affect the projector's life.

TRIGGER terminal

The TRIGGER terminal on the rear of the projector is a terminal that outputs a 12 V signal to control an externally connected device (electric screen) when images are projected.

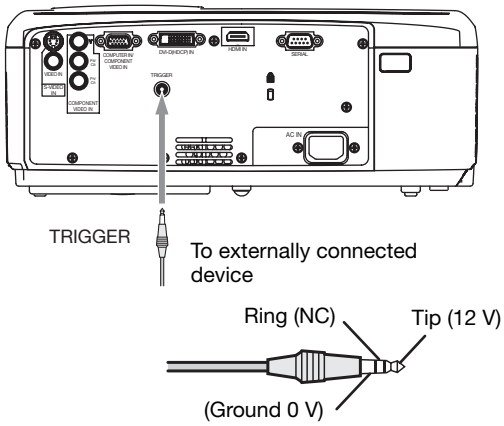

To use the TRIGGER terminal, set TRIGGER OUT to ON in the INSTALLATION menu. (The factory default is OFF.) Use the following steps to change the setting.

With the INSTALLATION menu:
(See page 25 for menu setting.)

1. Display the INSTALLATION menu.
2. Select TRIGGER OUT by pressing the ▲ or ▼ button.
3. Select ON by pressing the ◀ or ▶ button.

To cancel the menu:

4. Press the MENU button.

Caution:

- Do not use the signal output from the TRIGGER terminal as a power for other devices.
- Do not link the TRIGGER terminal with an audio terminal of other device because that device may be damaged.
- The rated current for the TRIGGER terminal is 200 mA. If you use a current exceeding this rating, a failure may occur.
- For information about electric screens, please contact screen manufacturers.

Screen size and projection distance

Refer to the following table to determine the screen size.

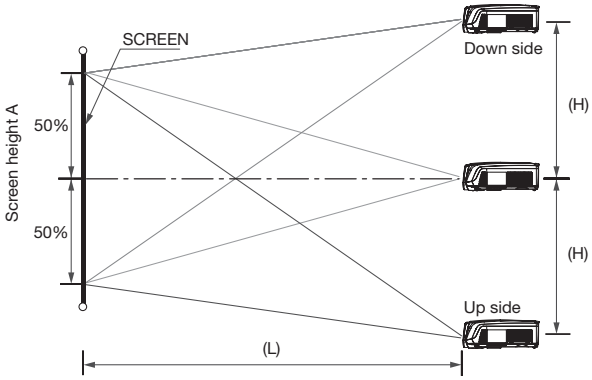

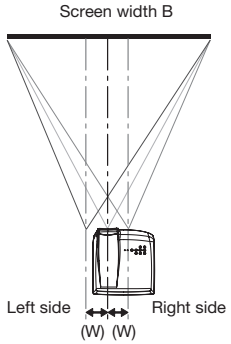

When the aspect ratio of the screen is 16:9

Screen size						Projection distance (L)				Lens movable range			
Diagonal size		Height A		Width B		Min.		Max.		(H)		(W)	
inch	cm	inch	cm	inch	cm	inch	m	inch	m	inch	cm	inch	cm
50	127	25	62	44	111	60	1.5	98	2.5	18	47	2	6
60	152	29	75	52	133	73	1.8	118	3.0	22	56	3	7
70	178	34	87	61	155	85	2.2	138	3.5	26	65	3	8
80	203	39	100	70	177	98	2.5	157	4.0	29	75	3	9
90	229	44	112	78	199	110	2.8	177	4.5	33	84	4	10
100	254	49	125	87	221	123	3.1	197	5.0	37	93	4	11
110	279	54	137	96	244	135	3.4	217	5.5	40	103	5	12
120	305	59	149	105	266	148	3.8	237	6.0	44	112	5	13
150	381	74	187	131	332	185	4.7	297	7.6	55	140	7	17
200	508	98	249	174	443	248	6.3	397	10.1	74	187	9	22
250	635	123	311	218	553	311	7.9	497	12.6	92	233	11	28
300	762	147	374	261	664	373	9.5	597	15.2	110	280	13	33

- The above figures are approximate and may be slightly different from the actual measurements.
- Projection distance changes according to the setting of SCREEN SIZE in the ADVANCED MENU in the IMAGE menu. The table above is in the case of “16:9.”

When the aspect ratio of the screen is 4:3

When the aspect ratio of the screen is 4:3, the positional relation between the projected image and the screen is as shown on the right. Refer to the following table for installation.

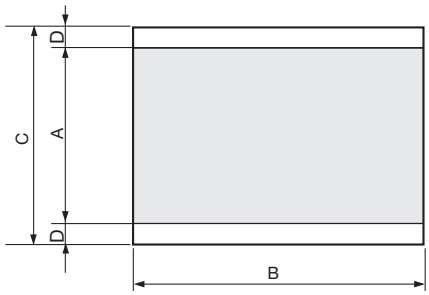

When the aspect ratio of the image is 16:9

Screen size						Size of the projected image				Black space (D)		Projection distance (L)				Lens movable range			
Diagonal size		Height C		Width B		Height A		Width B				Min.		Max.		(H)		(W)	
inch	cm	inch	cm	inch	cm	inch	cm	inch	cm	inch	cm	inch	m	inch	m	inch	cm	inch	cm
50	127	30	76	40	102	23	57	40	102	4	10	55	1.4	89	2.3	17	43	2	6
60	152	36	91	48	122	27	69	48	122	5	11	66	1.7	108	2.7	20	51	2	6
70	178	42	107	56	142	32	80	56	142	5	13	78	2.0	126	3.2	24	60	3	7
80	203	48	122	64	163	36	91	64	163	6	15	89	2.3	144	3.7	27	69	3	8
90	229	54	137	72	183	41	103	72	183	7	17	101	2.6	163	4.1	30	77	4	9
100	254	60	152	80	203	45	114	80	203	8	19	112	2.9	181	4.6	34	86	4	10
110	279	66	168	88	224	50	126	88	224	8	21	124	3.1	199	5.1	37	94	4	11
120	305	72	183	96	244	54	137	96	244	9	23	135	3.4	218	5.5	41	103	5	12
150	381	90	229	120	305	68	171	120	305	11	29	170	4.3	273	6.9	51	129	6	15
200	508	120	305	160	406	90	229	160	406	15	38	227	5.8	365	9.3	68	171	8	20
250	635	150	381	200	508	113	286	200	508	19	48	285	7.2	456	11.6	84	214	10	25
300	762	180	457	240	610	135	343	240	610	23	57	342	8.7	548	13.9	101	257	12	30

- The above figures are approximate and may be slightly different from the actual measurements.
- Projection distance changes according to the setting of SCREEN SIZE in the ADVANCED MENU in the IMAGE menu. The table above is in the case of “16:9.”

Viewing video images

A. Connecting the projector to video equipment

- When the projector and the connected devices are located too close to each other, the projected image may be affected by their interference.
- See the owner's guide of each device for details about its connections.

Preparation:

- Make sure that the power of the projector and that of the video equipment are turned off.

Basic home theater system connection

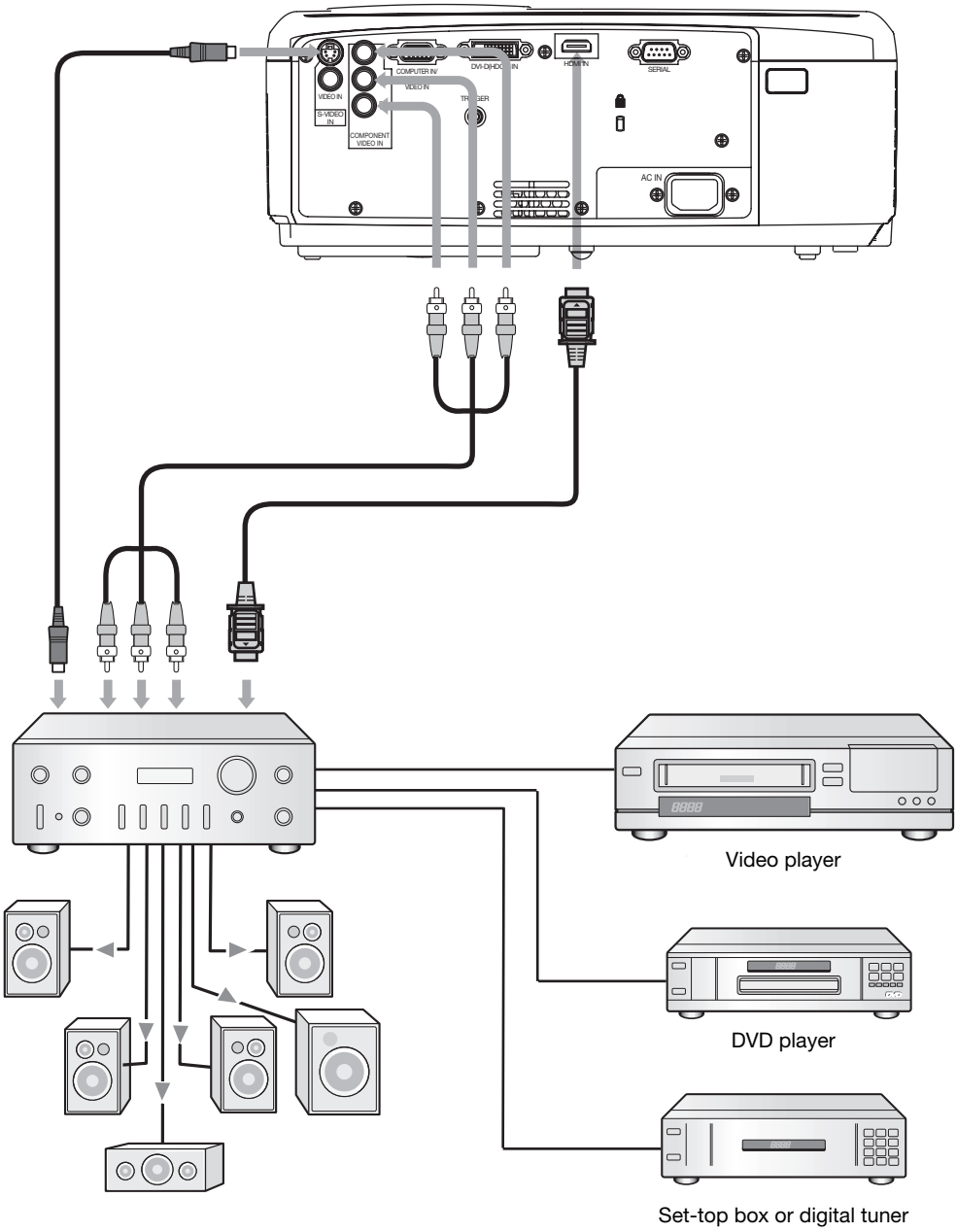

Connecting to a video player, etc.

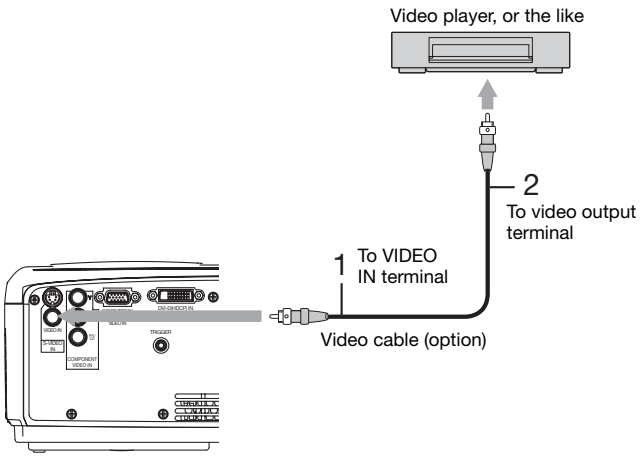

1. Connect one end of the optional video cable to the VIDEO IN terminal of the projector.
2. Connect the other end of the video cable to the video output terminal of the video equipment.

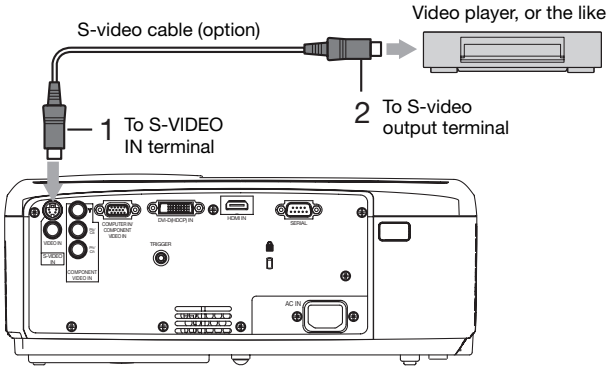

When the video equipment is equipped with the S-video output terminal, make the connection as follows:

1. Connect one end of the optional S-video cable to the S-VIDEO IN terminal of the projector.
2. Connect the other end of the S-video cable to the S-video output terminal of the video equipment.

- Also read the instruction manual of the equipment to be connected.
- Contact your dealer for details of connection.

When a TV tuner or VCR is connected:
When you use this projector with a TV tuner or VCR connected, no image may appear or a message of NO SIGNAL may appear on the screen when you change the channel via any channel that is not being received. In such a case, set the channels of the TV tuner or VCR again. To avoid such symptom, use the TV tuner or VCR with its channel skip function (that is a function not to display channels that are not being received) enabled.

Connecting to a DVD player or HDTV decoder

To connect this projector to video equipment that has component video output terminals, such as a DVD player, use the COMPONENT VIDEO IN terminals.

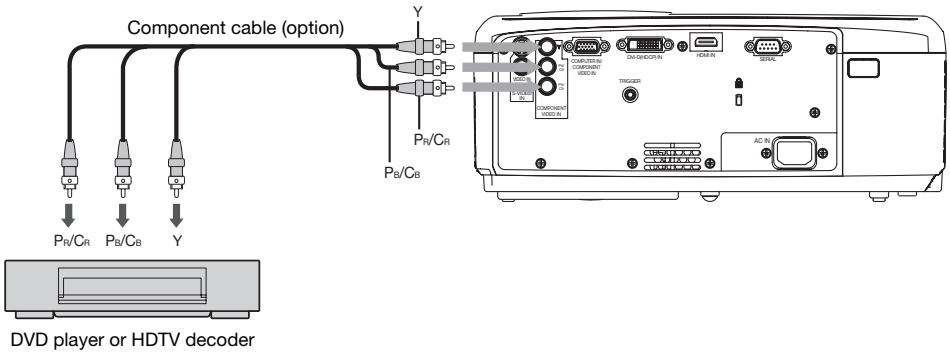

- The terminal's names Y, P_B, and P_R are given as examples of when a HDTV decoder is connected.
- The terminal's names vary depending on the connected devices.
- Images may not be projected correctly depending on the type of the DVD player you use.
- Though it may take some time before an image is displayed on the screen depending on the type of the input signal, such symptom is not a malfunction.
- When connecting a HDTV decoder having RGB output terminals, set COMPUTER INPUT to RGB in the SIGNAL menu.

Connecting to video equipment having a HDMI terminal or DVI-D terminal

You can project high-quality images by connecting the HDMI IN terminal of this projector to video equipment having a HDMI output terminal or DVI-D terminal of this projector to video equipment having a DVI-D output terminal. In addition, this projector supports HDCP and is able to receive encrypted digital video data that are output from DVD players.

- Select HDMI or DVI as the input source.
- HDCP (High-bandwidth Digital Content Protection), developed by Intel Corporation, is a method to encrypt digital video data for the purpose of copy protection.
- HDMI (High-Definition Multimedia Interface) is fully backward compatible with computers, displays and consumer electronics devices incorporating the DVI standards.
- This projector can be linked with video devices equipped with HDMI output terminal or DVI-D output terminal. However, with some of them, this projector may not display any image or not operate correctly.
- If this projector doesn't display any image or not operate correctly, see the operation manual of the video device for its connection.
- When you use the video equipment other than HDMI conformity product, the image may not be projected properly.
- Use of a long cable may decrease the quality of projected images.

Connection (for video equipment having an HDMI terminal)

- Use a commercially available HDMI (with HDMI logo) cable.
- Some cables may not be connected correctly depending on the size and shape of their connectors.
- To connect a second HDMI device, connect it to the DVI-D (HDCP) IN terminal using a DVI-HDMI conversion cable.

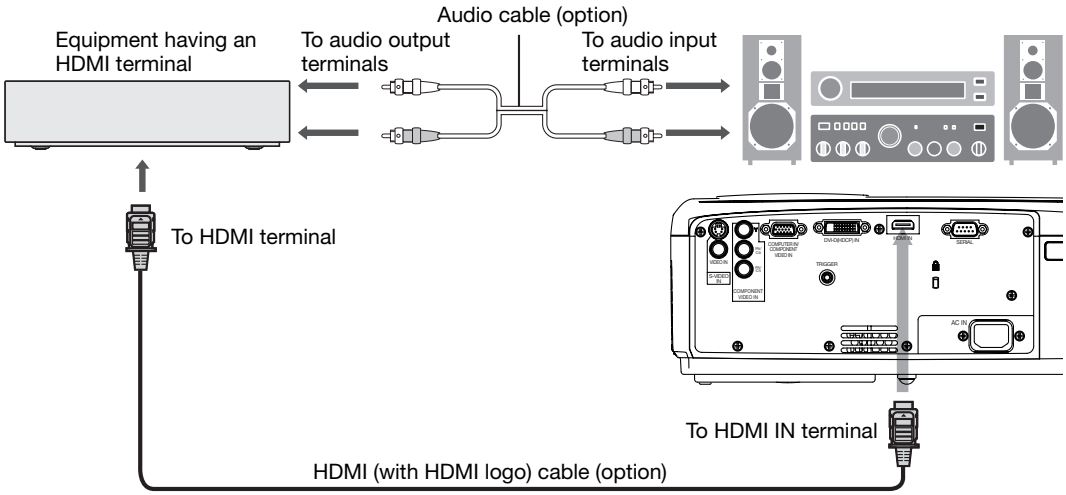

Connection (for video equipment having a DVI-D terminal)

- Use a commercially available DVI cable.

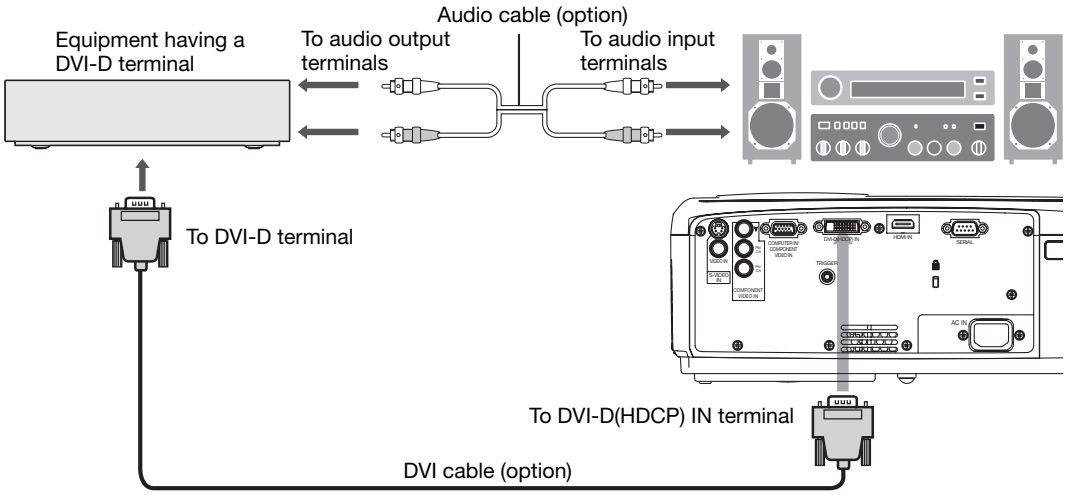

- Images may not be projected correctly depending on the type of the video equipment you use.
- Depending on the type of DVD recorder connected to the DVI-D(HDCP) IN terminal, the projected image may be tinted with magenta. In this case, set COMPUTER INPUT of the SIGNAL menu to YC_BC_R/YP_BP_R. (See page 28.)

When you connect this projector and a DVI-Digital device (such as a DVD player) via the HDMI terminal or DVI-D (HDCP) terminal, black color may appear dark and deep, depending on the type of the connected device.

- This depends on the black level setting of the connected device. There are two kinds of methods to digitally transfer image data, in which different black level settings are employed respectively. Therefore, the specifications of the signals output from DVD players differ, depending on the type of the digital data transfer method they use.
- Some DVD players are provided with a function to switch the methods to output digital signals. When your DVD player is provided with such function, set it as follows.

  EXPAND or ENHANCED → NORMAL
  - See the users guide of your DVD player for details.
- Set INPUT LEVEL of ADVANCED MENU in the IMAGE menu depending on the device to be used.

B. Plugging in the power cord

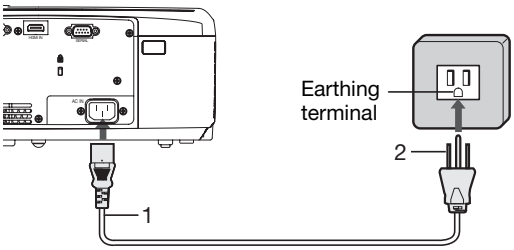

Power cord (example)

1. Plug the attached power cord into the power cord inlet of this projector.
2. Plug the other end of the power cord into a power outlet.

- The power cords for use in the U.S. and Europe are included with this projector. Use the appropriate one for your country.
- This projector uses the power plug of three-pin grounding type. Do not take away the grounding pin from the power plug. If the power plug doesn't fit your wall outlet, ask an electrician to change the wall outlet.
- The provided power cord for the U.S. is rated at 120 V. Never connect this cord to any outlet or power supply using other voltages or frequencies than rated. If you use a power supply using other voltage than rated, prepare an appropriate power cord separately.
- Use 100-240 V AC 50/60 Hz to prevent fire or electric shock.
- Do not place any objects on the power cord or do not place the projector near heat sources to prevent damage to the power cord. If the power cord should be damaged, contact your dealer for replacement because it may cause fire or electric shock.
- Do not modify or alter the power cord. If the power cord is modified or altered, it may cause fire or electric shock.

Caution:

- Plug in the power cord firmly. When unplugging, hold and pull the power plug, not the power cord.
- Do not plug in or out the power cord with your hand wet. It may cause electric shock.

C. Projecting images

Preparation:
- Remove the lens cap.
- Turn on the power of the connected video equipment.

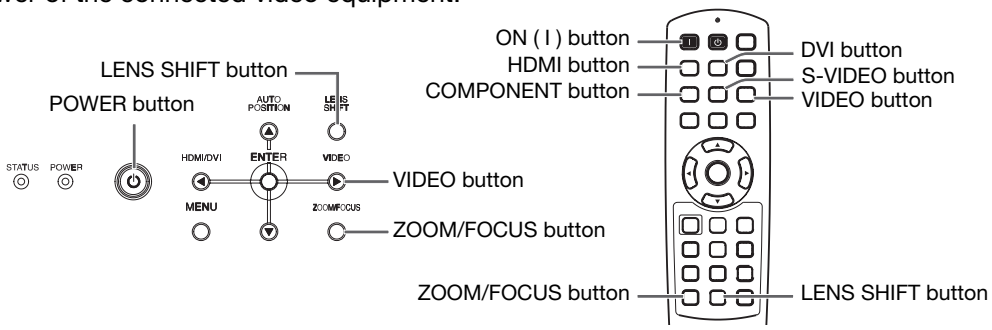

1. Confirm the POWER indicator lights-up red.
   - If the projector was turned off before the lamp had cooled down sufficiently, the fan may start rotating and the POWER button may not work after the power cord is plugged. (The STATUS indicator blinks green.) After the fan stops rotating, press the POWER button to turn back on the POWER indicator.
2. Press the POWER button on the projector or ON (I) button on the remote control.
   - It may take about one minute for the lamp to light up.
   - The lamp fails to light up on rare occasions. In such a case, wait for a few minutes and then try again.
   - Do not cover the lens with the lens cap while the lamp is on. Do not strip off the aluminium sheet inside the lens cap.
   - After the POWER button is pressed, the image may flicker before the lamp becomes stable. This is not a product malfunction.
   - The STANDARD lamp mode is activated by default whenever the projector is turned on. When the LOW LAMP MODE has been chosen, the default STANDARD lamp mode is switched to the LOW lamp mode in 1 minute.
   - The projector starts warming up when the POWER button is pressed. During the warm-up process, images may appear dark and no commands are accepted.
   - By blinking red, the STATUS indicator indicates that the lamp should be replaced soon. Replace the lamp when the STATUS indicator blinks red. (See page 41.)
3. Press the ZOOM/FOCUS button on the projector or on the remote control to display “FOCUS”.
4. Adjust with the ◀ or ▶ button to get a fine picture.
5. Select an input source.
   - Press the VIDEO or HDMI/DVI button on the projector or the VIDEO, S-VIDEO, COMPONENT, HDMI or DVI button on the remote control that is corresponding to the terminal in use.
   - The input source is switched between VIDEO, S-VIDEO and COMPONENT every time you press the VIDEO button on the projector.
   - The projector automatically selects the appropriate signal format. (The selected signal format is displayed on the INFORMATION menu.)
   - You cannot change the input source while the menu is being displayed.
   - Though it may take some time before an image is displayed on the screen depending on the type of the input signal, such symptom is not a malfunction.
   - Some images become easier to view when the setting of aspect ratio is changed. (See page 19.)
6. Adjust the position of the projector to keep an appropriate projection distance with which images are projected in their specified sizes.
7. Adjust the position of the projector so that the projector and the screen are perpendicular to each other. (See page 10.)
8. Press the ZOOM/FOCUS button on the projector or on the remote control to display “FOCUS” and then press the button again to display “ZOOM.”
9. Adjust with the ◀ or ▶ button to get an approximate size.
10. Press the LENS SHIFT button. “LENS SHIFT” will appear on the display.
11. Press the ▲ or ▼ button to adjust the vertical position and ◀ or ▶ button to adjust the horizontal position of the displayed image.
    - When the projector cannot be positioned perpendicularly to the screen, adjust the projection angle. (See page 10.)

Repeat steps 3 to 4 and 8 to 11, if necessary.

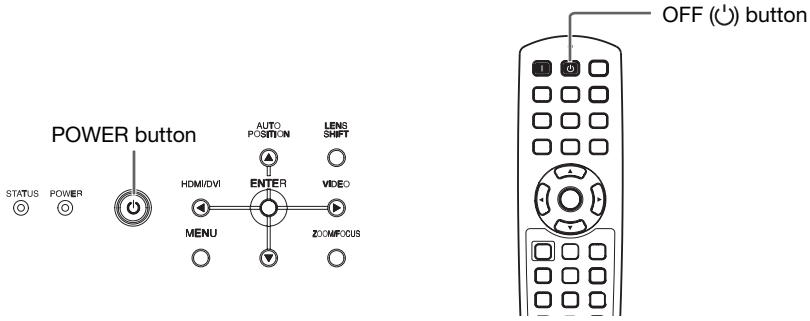

To stop projecting:

12. Press the POWER button on the projector or the OFF (⏻) button on the remote control.
    - A confirmation message is displayed.
    - To cancel the procedure, leave the projector for a while or press the MENU button.
13. Press the POWER button on the projector or the OFF (⏻) button on the remote control again.
    - The lamp goes out and the projector goes into a standby mode. In this standby mode, the STATUS indicator blinks green.
14. Wait about 2 minutes.
    - During this period of 2 minutes in the standby mode, the intake fan and exhaust fan rotate to cool the lamp.
    - The lamp can't be lit again for 1 minute after turning off the projector for safety purpose. It will take another 1 minute for the STATUS indicator to go out. If you want to turn on the projector again, wait until the indicator goes out, and then press the POWER button.
    - The air outlet fans rotate faster as the temperature around the projector rises.
    - Do not unplug the power cord while the STATUS indicator is blinking. Unplugging the power cord immediately after use may cause a lamp breakdown.
    - Though the fan makes loud sound during cooling, such symptom is not a malfunction.
15. Unplug the power cord from the outlet.
    - The POWER indicator will go out.
    - If the power cord should be unplugged accidentally while either the air inlet fan or the air outlet fans are operating or the lamp is on, allow the projector to cool down for 10 minutes with the power off. To light the lamp again, press the POWER button. If the lamp doesn't light up immediately, repeat pressing the POWER button two or three times. If it should still fail to light up, replace the lamp.
    - Cover the lens with the lens cap to protect it from dust.

Setting the aspect ratio

You can change the aspect ratio of the input video signal (or the ratio of width to height of the image). Change the setting according to the type of the input video signal.

: Signal size : Image area

Original image size		4:3 Aspect ratio changes depending on the input signal.	16:9 Squeezed image is expanded to 16:9.	ZOOM1 CinemaScope image is enlarged and displayed together with subtitles.	ZOOM2 Vista image is enlarged and displayed together with subtitles.	STRETCH Image is enlarged to 16:9 while the center aspect ratio remains unchanged.
4:3 image (480i, 576i, 480p, 576p, and PC)						
Squeezed 4:3 (480i, 576i, 480p, 576p)						
4:3 CinemaScope (480i, 576i, 480p, 576p)	Sub Title	Sub Title	Sub Title	Sub Title		Sub Title
4:3 Vista image (480i, 576i, 480p, 576p)						
16:9 image (720p, 1080i, 1080p)						

- Bold frames are recommended modes.
- When ASPECT is set to AUTO, an optimum aspect ratio is automatically selected depending on the input signal.
- When ASPECT is set to ZOOM1 or ZOOM2, display position can be changed with ▲ or ▼ button on the remote control.
- OVER SCAN in the SIGNAL menu is not available in the STRETCH mode.
- Display pattern changes according to the setting of SCREEN SIZE in the IMAGE menu. The table above is in the case of “16:9.”
- This projector is equipped with a function to change the aspect ratio. If you select an aspect ratio that is inconsistent with that of the input signal, images around the screen edges may be hidden or deformed. When viewing original video works reflecting the authors’ intentions, you are recommended to keep their aspect ratios unchanged.
- It may be an infringement of the rights protected by the copyright law to project images compressed or enlarged by changing the aspect ratio in public areas, such as inside and outside shops and hotels, for commercial or public viewing purposes.
- When SCREEN SIZE of ADVANCED MENU is set to CINEMA SCOPE(2.35:1) in the IMAGE menu, STRETCH cannot be selected for ASPECT.

How to change the settings:

With the remote control:

1. Press the ASPECT button.
   - Every time the ASPECT button is pressed, the aspect mode changes from AUTO to 4:3, 16:9, to ZOOM1, to ZOOM2, to STRETCH, and back to AUTO.
   - Some modes are not available with certain signals.

With the FEATURE menu:
(See page 25 for menu setting.)

1. Display the FEATURE menu.
2. Select ASPECT by pressing the ▲ or ▼ button.
3. Select your desired aspect ratio by pressing the ◀ or ▶ button.

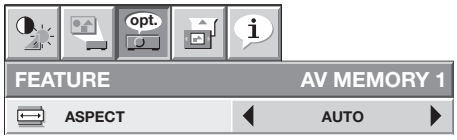

To cancel the menu:

4. Press the MENU button.

Important:

- When a 4:3 image is kept displayed for a long time before displaying 16:9 image, the afterimages of the black bars may appear on the 16:9 image screen. (See page 39.)

Viewing computer images

A. Connecting the projector to a computer

Preparation:

- Make sure that the power of the projector and that of the computer are turned off.
- When connecting the projector to a desktop computer, disconnect the RGB cables that are connected to the monitor.

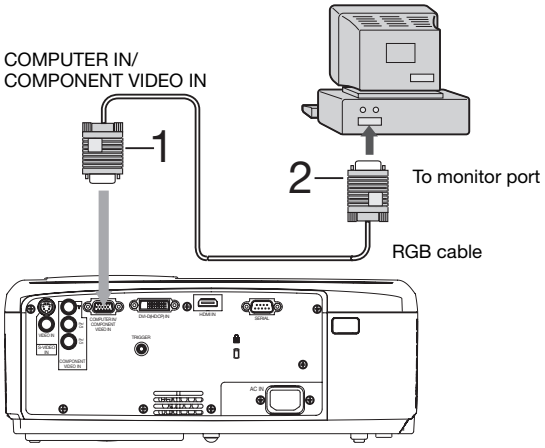

For analog connection:

1. Connect one end of the supplied RGB cable to the COMPUTER IN/COMPONENT VIDEO IN terminal of the projector.
2. Connect the other end of the RGB cable to the monitor port of the computer.

- Additional devices, such as a conversion connector and an analog RGB output adapter, are required depending on the type of the computer to be connected.
- When viewing images supplied from an analog-connected computer, press the COMPUTER button on the remote control.

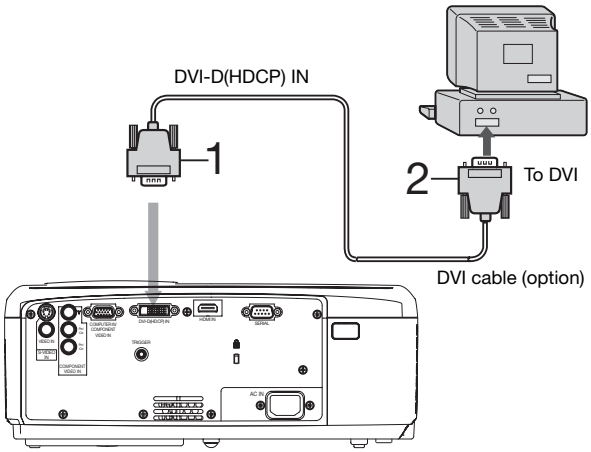

For digital connection:

1. Connect one end of a commercially available DVI cable to the DVI-D(HDCP) IN terminal of the projector.
2. Connect the other end of the DVI cable to the DVI terminal of the computer.

- Additional devices, such as a conversion connector and an analog RGB output adapter, are required depending on the type of the computer to be connected.
- When viewing images supplied from a digital-connected computer, press the DVI button on the remote control.
- The signal input to the DVI-D(HDCP) IN terminal is not output from the COMPUTER OUT terminal.

- Turn on the power of the projector before that of the computer.
- Additional devices, such as a conversion connector and an analog RGB output adapter, are required depending on the type of the computer to be connected.
- Use of a long cable may decrease the quality of projected images.
- Also read the instruction manual of the equipment to be connected.
- Images may not be projected correctly, depending on the type of the computer connected.
- Contact your dealer for details of connection.

About DDC

The COMPUTER IN/COMPONENT VIDEO IN terminal of this projector complies with the DDC1/2B standard and the DVI-D(HDCP) IN and HDMI IN terminals comply with the DDC2B standard. When a computer supporting this standard is connected to this terminal, the computer will automatically load the information from this projector and prepare for output of appropriate images.

- After connecting a computer supporting this standard to this terminal, plug the power cord of the projector in the wall outlet first, and then boot up the computer.

B. Plugging the power cord

Plug the power cord in the same way as described in “Viewing video images.” (See page 16.)

C. Projecting images

Preparation:
- Remove the lens cap.
- Turn on the power of the connected computer.

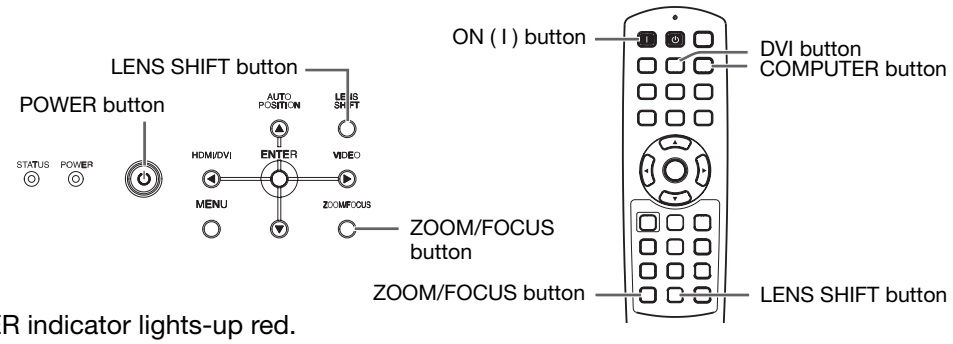

1. Confirm the POWER indicator lights-up red.
   - If the projector was turned off before the lamp had cooled down sufficiently, the fan may start rotating and the POWER button may not work after the power cord is plugged. (The STATUS indicator blinks green.) After the fan stops rotating, press the power button to turn back on the POWER indicator.
2. Press the POWER button on the projector or ON (I) button on the remote control.
   - It may take about one minute for the lamp to light up.
   - The lamp fails to light up on rare occasions. In such a case, wait for a few minutes and then try again.
   - Do not cover the lens with the lens cap while the lamp is on. Do not strip off the aluminium sheet inside the lens cap.
   - After the POWER button is pressed, the image may flicker before the lamp becomes stable. This is not a product malfunction.
   - The STANDARD lamp mode is activated by default whenever the projector is turned on. When the LOW LAMP MODE has been chosen, the default STANDARD lamp mode is switched to the LOW lamp mode in 1 minute.
   - The projector starts warming up when the POWER button is pressed. During the warm-up process, images may appear dark and no commands are accepted.
   - By blinking red, the STATUS indicator indicates that the lamp should be replaced soon. Replace the lamp when the STATUS indicator blinks red. (See page 41.)
3. Press the ZOOM/FOCUS button on the projector or on the remote control to display “FOCUS”.
4. Adjust with the ◀ or ▶ button to get a fine picture.
5. Select an input source.
   - Press the HDMI/DVI button on the projector or the COMPUTER , HDMI or DVI button on the remote control that is corresponding to the terminal in use.
   - The input source is switched between COMPUTER, HDMI and DVI every time you press the HDMI/DVI button on the projector.
   - Though it may take some time before an image is displayed on the screen depending on the type of the input signal, such symptom is not a malfunction.
   - Images may not be projected in the correct position, depending on the type of the input signal. In such a case, press the AUTO POSITION button. (See page 23.)
   - The projector automatically selects the appropriate signal format. (The selected signal format is displayed on the INFORMATION menu.)
   - You cannot change the input source while the menu is being displayed.
   - When COMPUTER is chosen as the source, images supplied from the computer may flicker. Press the ◀ or ▶ button on the remote control to reduce flicker, if it occurs.
6. Adjust the position of the projector to keep an appropriate projection distance with which images are projected in their specified sizes.
7. Adjust the position of the projector so that the projector and the screen are perpendicular to each other. (See page 10.)
8. Press the ZOOM/FOCUS button on the projector or on the remote control to display “FOCUS” and then press the button again to display “ZOOM.”
9. Adjust with the ◀ or ▶ button to get an approximate size.
10. Press the LENS SHIFT button. “LENS SHIFT” will appear on the display.
11. Press the ▲ or ▼ button to adjust the vertical position and ◀ or ▶ button to adjust the horizontal position of the displayed image.
    - When the projector cannot be positioned perpendicularly to the screen, adjust the projection angle. (See page 10.)

Repeat steps 3 to 4 and 8 to 11, if necessary.

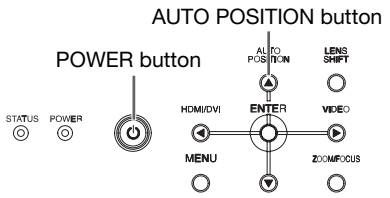

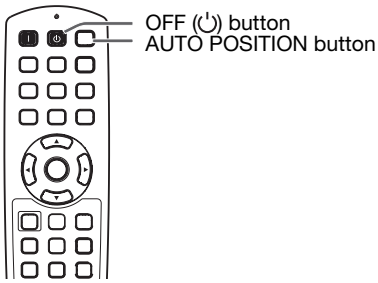

To stop projecting:

12. Press the POWER button on the projector or the OFF (⏻) button on the remote control.
    - A confirmation message is displayed.
    - To cancel the procedure, leave the projector for a while or press the MENU button.
13. Press the POWER button on the projector or the OFF (⏻) button on the remote control again.
    - The lamp goes out and the projector goes into a standby mode. In this standby mode, the STATUS indicator blinks green.
14. Wait about 2 minutes.
    - During this period of 2 minutes in the standby mode, the intake fan and exhaust fan rotate to cool the lamp.
    - The lamp can't be lit again for 1 minute after turning off the projector for safety purpose. It will take another 1 minute for the STATUS indicator to go out. If you want to turn on the projector again, wait until the indicator goes out, and then press the POWER button.
    - The air outlet fans rotate faster as the temperature around the projector rises.
    - Do not unplug the power cord while the STATUS indicator is blinking. Unplugging the power cord immediately after use may cause a lamp breakdown.
    - Though the fan makes loud sounds during cooling, such symptom is not a malfunction.
15. Unplug the power cord from the outlet.
    - The POWER indicator will go out.
    - If the power cord should be unplugged accidentally while either the air inlet fan or the air outlet fans are operating or the lamp is on, allow the projector to cool down for 10 minutes with the power off. To light the lamp again, press the POWER button. If the lamp doesn't light up immediately, repeat pressing the POWER button two or three times. If it should still fail to light up, replace the lamp.
    - Cover the lens with the lens cap to protect it from dust.

AUTO POSITION button

When the image supplied from the computer is displaced, carry out the following procedure.

1. Display a bright image (such as a full-screen display of the Recycle Bin window).
2. When the screen saver has been enabled, disable it.
3. Press the AUTO POSITION button.
   The projector automatically makes optimum positional settings for the input signal.

- If the image is not projected in the correct position even after you press the AUTO POSITION button several times, change the settings in the SIGNAL menu to put the image in the correct position. (See page 33.)
- When you carry out this procedure with a dark image, the image may be displaced.

When connecting to a notebook computer:

When the projector is connected to a notebook computer, images may not be projected in some cases. In such cases, set the computer so that it can output signals externally. The setting procedure varies depending on the type of the computer. See the instruction manual of your computer.

Example of the setting procedure for external output

Press the [Fn] key and any of the keys [F1] to [F12] at the same time. (The key to be pressed depends on the type of the computer you use.)

Menu operation

- Menus are not displayed when no signal is supplied to the projector.

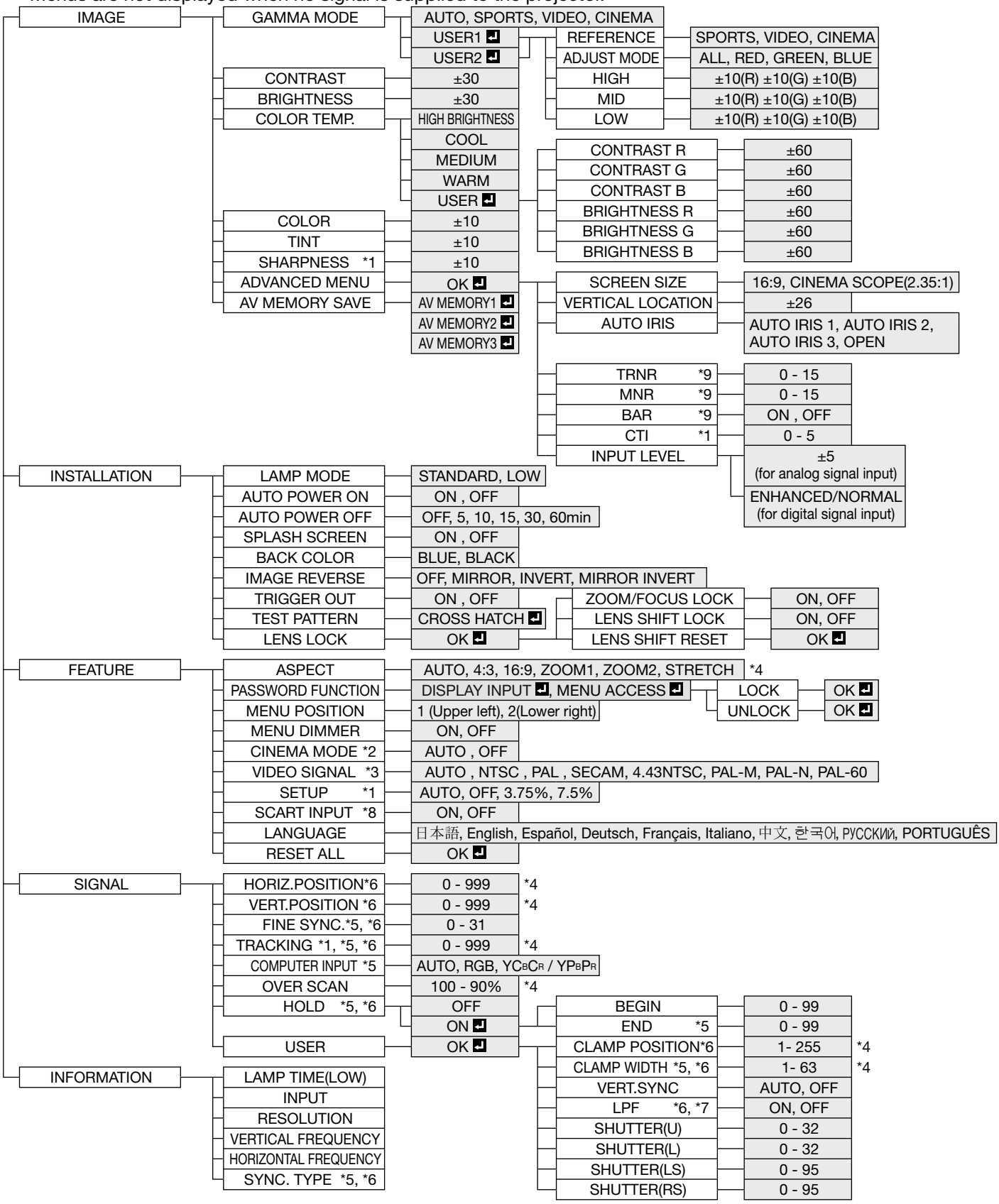

* 1: Not available with certain signals.
* 2: Available only when the input signal is TV50, TV60, 480i, 576i or 1080i.
* 3: Available only when the input signal is from the VIDEO IN or S-VIDEO IN terminal.
* 4: Setting range differs depending on the input signals.
* 5: Not available when the input signal is from the VIDEO IN or S-VIDEO IN terminal.
* 6: Not available when the input signal is from the HDMI IN or DVI-D(HDCP) IN terminal.
* 7: Available only when the input signal is 480i, 480p, 576i, or 576p.
* 8: Available only when the input signal is from the COMPUTER IN/COMPONENT VIDEO IN terminal.
* 9: Available only when the input signal is 480i, 480p, 576i, 576p, TV60 or TV50.

How to set the menus:

The following describes how to set AUTO POWER OFF time as an example.

1. Press the MENU button.
   - When no signal is applied, the menu would not appear.

2. Press the ◀ or ▶ button to select a menu to use.

3. Press the ENTER button (or ▼ button).

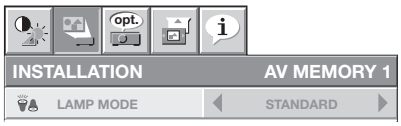

4. Press the ▲ or ▼ button to select an item to adjust.

5. Set the selected item by pressing the ◀ or ▶ button.

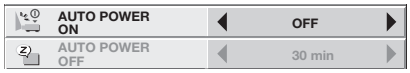

To cancel the menu:

6. Press the MENU button several times.

Important:

- When the MENU button doesn't function, unplug the power cord from the wall outlet. Wait about 10 minutes, plug the power cord in, and try again.
- After selecting the items marked with ↵, press the ENTER button.

Available settings in the menus

Set the following items on their relevant menus.

1. IMAGE menu

1. IMAGE menu

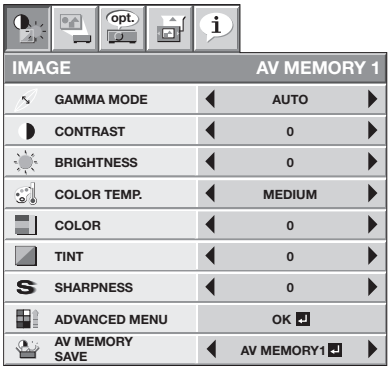

ITEM	SETTING	FUNCTION
GAMMA MODE	AUTO	The proper gamma mode is automatically selected depending on the input signal. Default is AUTO.
	SPORTS	This is a bright mode suitable for watching sports images.
	VIDEO	This is a standard mode suitable for watching video images, etc.
	CINEMA	This is a mode for watching movies in dim lighting as in a theater.
	USER1 ↵ / USER2 ↵	Select to adjust the gamma curve. (See page 32.)
CONTRAST	±30	Use to adjust the contrast of the projected image. (See page 30.)
BRIGHTNESS	±30	Use to adjust the brightness of the projected image. (See page 30.)
COLOR TEMP.	5 options	Use to adjust the color temperature. (See page 31.)
COLOR	±10	Use to adjust the color thickness of the projected image. (See page 30.)
TINT	±10	Use to adjust the color tint of the projected image. (See page 30.)
SHARPNESS	±10	Use to adjust the sharpness of the projected image. (See page 30.)
ADVANCED MENU		
SCREEN SIZE	2 options	Select according to the screen size.
VERTICAL LOCATION	±26	Use to adjust the position (height) of the projected image.
AUTO IRIS	4 options	Select an iris mode depending on the projected image. (See page 31.)
TRNR	0 - 15	Use to reduce random noise. (See page 32.)
MNR	0 - 15	Use to reduce mosquito noise. (See page 32.)
BAR	ON/OFF	Use to reduce block noise. (See page 32.)
CTI	0 - 5	Use to correct smeared color boundaries.
INPUT LEVEL	±5	For analog signal input: The input level of video signal differs among devices to be connected. High input level causes solid white in displayed image and low input level causes displayed image to get dark. Use this menu to adjust the input level of analog video signal.
	ENHANCED / NORMAL	For digital signal input: When a digital signal is input, ENHANCED and NORMAL are switchable. (See page 16.)
AV MEMORY SAVE	3 options	Select the AV MEMORY to which you save the current setting. (See page 29.)

- By using the AV memory function, you can save up to 3 setting patterns of IMAGE menu for each input terminal. (See page 29.)
- INPUT LEVEL is unavailable when the digital signal is supplied from the YC_BC_R/YP_BP_R terminal of the connected device.

2. INSTALLATION menu

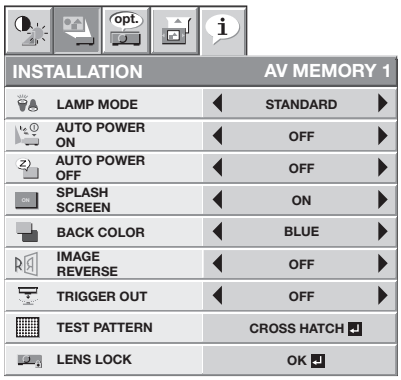

2. INSTALLATION menu

ITEM	SETTING	FUNCTION
LAMP MODE	STANDARD	Select this option when you want to view images in a well-lit room.
	LOW	Select to moderate the intensity of the lamp. The fan operating sound is reduced and the lamp lifetime becomes longer.
AUTO POWER ON	ON / OFF	When ON is chosen, the lamp is automatically lit when the power cord is plugged in the wall outlet. Choose ON when using the projector mounted on the ceiling. • The projector is in the stand-by mode when the lamp is off. Use the remote control to turn on the lamp.
AUTO POWER OFF	OFF / 5 - 60min	Use to set the time elapsed before the projector enters the stand-by mode when there is no signal input from the source.
SPLASH SCREEN	ON / OFF	Choose ON to display the splash screen when the power is turned on.
BACK COLOR	BLUE / BLACK	Use to change the color of the screen that appears when no signal is supplied.
IMAGE REVERSE	OFF	Select when viewing images from the front with the projector installed on the floor.
	MIRROR	Select when viewing images projected from the behind of the screen with the projector installed on the floor.
	INVERT	Select when viewing images projected from the behind of the screen with the projector installed on the ceiling.
	MIRROR INVERT	Select when viewing images from the front with the projector installed on the ceiling.
TRIGGER OUT	ON / OFF	Choose ON to output the trigger output signal (12 V) from the TRIGGER terminal when the lamp illuminates.
TEST PATTERN	CROSS HATCH ↵	Select to show the test cross hatch pattern.
LENS LOCK	ZOOM/FOCUS LOCK	Use to enable or cancel the FOCUS LOCK and ZOOM LOCK.
	LENS SHIFT LOCK	Use to enable or cancel the LENS SHIFT LOCK.
	LENS SHIFT RESET	Use to reset the position of the lens to the factory setting.

- When LAMP MODE has been set to LOW, the lamp mode changes from STANDARD to LOW about one minute after turn-on.
- When the lamp mode is switched, the projected image may flicker. This is not a product malfunction.
- Do not change the setting of LAMP MODE frequently.
- To cancel the test pattern, press any button.

3. FEATURE menu

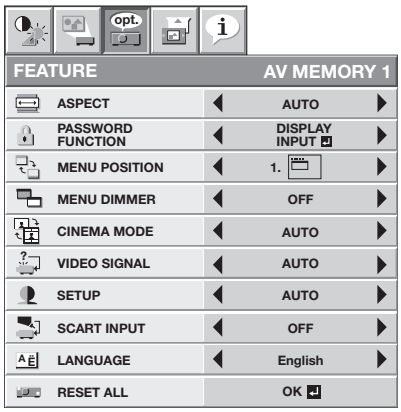

3. FEATURE menu

ITEM	SETTING	FUNCTION
ASPECT	AUTO	Select to change the aspect ratio automatically depending on the input signal.
	4:3	Select to project images with an aspect ratio of 4:3.
	16:9	Select to project images with an aspect ratio of 16:9. (Linearly stretched.)
	ZOOM1	Select to enlarge and project images of CinemaScope size.
	ZOOM2	Select to enlarge and project images of Vista size.
	STRETCH	Select to enlarge to 16:9 and project of the images with an aspect ratio of 4:3. (Non-linearly stretched.)
PASSWORD FUNCTION		Use to enable or cancel the password lock. See page 34 for details.
MENU POSITION	2 options	Use to change the position of the menu.
MENU DIMMER	ON / OFF	Use to reduce the brightness of the menu.
CINEMA MODE	AUTO	The film mode will be automatically activated when a film source signal is input.
	OFF	The film mode will not be activated.
VIDEO SIGNAL	8 options	When AUTO is selected, the appropriate video format is automatically selected depending on the input signal. If the image isn't displayed correctly, select the desired video format manually.
SETUP	AUTO	Select AUTO for normal use. When LANGUAGE is not set to 日本語 and 480i, 480p or TV60 signal is input, the SETUP changes to 7.5% automatically.
	OFF	Select to make black lighter.
	3.75% / 7.5%	Select to make black intense. • When 7.5% is chosen, the brightness is decreased by the set-up cancel function for the U.S. Choose OFF when the image is dark.
SCART INPUT	ON / OFF	Choose ON when connecting the projector with a device equipped with the SCART terminal that can output RGB signal. SCART terminal is used mainly in Europe. Choose OFF normally. (Available only for the input signal from the COMPUTER IN/COMPONENT VIDEO IN terminal.)
LANGUAGE	10 languages	Use to select the language used in the menus.
RESET ALL	OK ↵	Use to reset the settings of the menu (excluding PASSWORD FUNCTION and LANGUAGE) to the factory setting values.

- When SCART INPUT is set to ON, normal computer signals aren't projected.
- Use a SCART-BNC (or SCART-Mini D-SUB 15-pin) cable (option) when connecting this projector with an AV device equipped with the SCART terminal.
- Some AV devices equipped with the SCART terminal aren't compatible with this projector.
- It may take a little while to carry out RESET ALL in the FEATURE menu.

4. SIGNAL menu

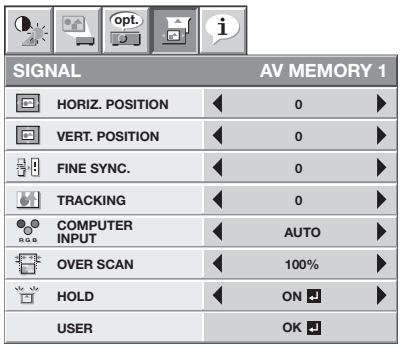

5. USER menu

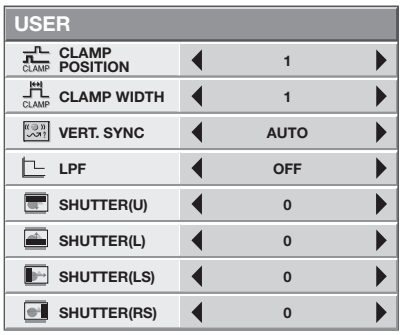

4. SIGNAL menu

ITEM	SETTING	FUNCTION
HORIZ. POSITION	0 - 999	Use to adjust the horizontal position of the projected image.
VERT. POSITION	0 - 999	Use to adjust the vertical position of the projected image.
FINE SYNC.	0 - 31	Use to eliminate flickering or blur, if it appears, while viewing the projected image.
TRACKING	0 - 9999	Use to eliminate vertical wide stripes, if it appears, while viewing the projected image.
COMPUTER INPUT	AUTO	The proper setting is automatically selected.
	RGB	Select this option when connecting the projector to high definition video equipment having R, G, and B output terminals.
	YC_BC_R / YP_BP_R	Select this option when connecting the projector to a DVD player or other device having Y, C_B, and C_R (or Y, P_B, and P_R) component video output terminals.
OVER SCAN	100 - 90%	Use to adjust the display area of the projected image when playing LD and DVD discs.
HOLD	OFF / ON ↵	Use to adjust the image when flagging occurs near the top of the screen.

- Though horizontal strips may appear on the enlarged projected image, such symptom is not a malfunction.
- When you change the horizontal or vertical position to a large extent, noise may appear.
- The adjustable range of the vertical position varies depending on the type of the input signal. Though the image may stay in the same position even when the setting value is changed, such symptom is not a malfunction.
- If you increase the OVER SCAN setting when viewing video signals, noise may appear on the screen. In this case, decrease the OVER SCAN setting.

5. USER menu

ITEM	SETTING	FUNCTION
CLAMP POSITION	1 - 255	Use to correct solid white or solid black in the projected image.
CLAMP WIDTH	1 - 63	Use to correct solid black in the projected image.
VERT.SYNC	AUTO / OFF	Use to adjust the image when its motion doesn't run smoothly. Select AUTO for normal use.
LPF	ON / OFF	Use to select whether or not to enable the LPF.
SHUTTER(U)	0 - 32	Use to display the black bar on the top part of the image.
SHUTTER(L)	0 - 32	Use to display the black bar on the bottom part of the image.
SHUTTER(LS)	0 - 95	Use to display the black bar on the left half of the image.
SHUTTER(RS)	0 - 95	Use to display the black bar on the right half of the image.

6. INFORMATION menu

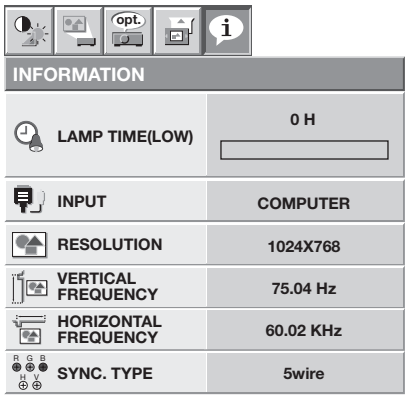

6. INFORMATION menu

ITEM	DESCRIPTION
LAMP TIME(LOW)	This item shows a lamp operating time (hour) calculated based on that LAMP MODE is LOW. • When the LAMP MODE is STANDARD, this item shows a longer lamp operating time than the actual time. (See page 35 for the interval of lamp replacement.) • When the lamp operating time is 0 to 10 hours, “0H” is displayed. The lamp operating time exceeding 10 hours is indicated by the actual hours. • When the lamp operating time reaches 3750 hours, the bar turns to yellow. When it reaches 4750 hours, the bar turns to red.
INPUT	Indicates the name of the terminal to which the currently projected video signal is being input.
RESOLUTION	Indicates the resolution of the currently projected video signal.
VERTICAL FREQUENCY	Indicates the vertical frequency of the currently projected video signal.
HORIZONTAL FREQUENCY	Indicates the horizontal frequency of the currently projected video signal.
SYNC. TYPE.....	Indicates the type of the sync signal for the currently projected video signal.

AV memory

You can store up to 3 patterns of the image quality setting for each input source.

To store the settings

1. Set the items of the IMAGE menu.
   - Setting the items by using the picture quality adjusting buttons on the remote control is also available.
2. Press the ▲ or ▼ button to select AV MEMORY SAVE.
3. Press the ◀ or ▶ button to select AV MEMORY (1, 2 or 3) to store the settings.
4. Press the ENTER button.

To enable the stored image quality settings

1. Press the AV MEMORY button to call up the stored setting.
   - When you make change to the stored setting you call up, the changed setting remains effective but is not saved to the AV MEMORY unless AV MEMORY SAVE is executed.

- When the input source is changed, the AV memory setting selected just before is automatically selected.
- When RESET ALL in the FEATURE menu is selected, all the settings of the AV memory are cleared.

Adjusting projected images

To adjust the brightness (CONTRAST and BRIGHTNESS):

You can make adjustments for the brightness of the projected image using the menu.
(See page 25 for menu setting.)

1. Display the IMAGE menu.
2. Select CONTRAST or BRIGHTNESS by pressing the ▲ or ▼ button.
3. Adjust the selected item by pressing the ◀ or ▶ button.

To cancel the menu:

4. Press the MENU button.

CONTRAST

Select to adjust the contrast of the image. Every time the ▶ button is pressed, the image becomes brighter and more defined. Every time the ◀ button is pressed, the image becomes darker and less defined.

BRIGHTNESS

Every time the ▶ button is pressed, the image becomes brighter. Every time the ◀ button is pressed, the image becomes darker.

To adjust the color (COLOR and TINT):

You can adjust the color of the projected image using the menu.
(See page 25 for menu setting.)

1. Display the IMAGE menu.
2. Select COLOR or TINT by pressing the ▲ or ▼ button.
3. Adjust the selected item by pressing the ◀ or ▶ button.

To cancel the menu:

4. Press the MENU button.

COLOR

Use to adjust the color intensity of the projected image. Every time the ▶ button is pressed, the color intensity increases. Every time the ◀ button is pressed, the color intensity decreases.

TINT

Use to adjust the tint of the projected image. Every time the ▶ button is pressed, the image appears more greenish. Every time the ◀ button is pressed, the image appears more reddish.

To sharpen or soften the projected image (SHARPNESS):

You can adjust the sharpness of the projected image using the menu.
(See page 25 for menu setting.)

1. Display the IMAGE menu.
2. Select SHARPNESS by pressing the ▲ or ▼ button.
3. Adjust the selected item by pressing the ◀ or ▶ button.

To cancel the menu:

4. Press the MENU button.

To adjust the tone of white (COLOR TEMP.):

You can select a preset color temperature (white tone) using the menu.
(See page 25 for menu setting.)

1. Display the IMAGE menu.
2. Select COLOR TEMP. by pressing the ▲ or ▼ button.
3. Select your desired color temperature by pressing the ◀ or ▶ button.
   HIGH BRIGHTNESS
   COOL(≒ 9300K)
   MEDIUM(≒ 6500K(D65))
   WARM(≒ 5800K)

To cancel the menu:

4. Press the MENU button.

To adjust the tone of white (To customize the color temperature):

To customize (and store) the color temperature to your preference, carry out the following procedure.
(See page 25 for menu setting.)

1. Select COLOR TEMP. in the IMAGE menu.
2. Press the ◀ or ▶ button to select USER ↵.
3. Press the ENTER button.
4. Press the ▲ or ▼ button to select the desired item.
5. Press the ◀ or ▶ button to adjust the selected item.
6. Repeat steps 4 and 5 for optimum adjustment results.

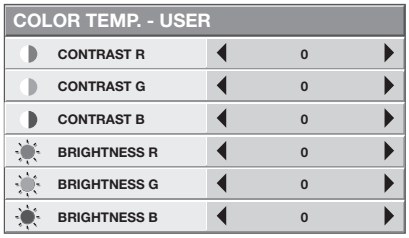

To cancel the menu:

7. Press the MENU button.

To enable the stored color temperature:

1. Select USER by pressing the COLOR TEMP button on the remote control.

About color temperature

There are different kinds of white color. Color temperature is a way to show the differences in white. White of which temperature is low appears reddish. When the color temperature rises, white appears bluish. For example, you can change the color temperature using the following procedures.
To rise the color temperature: Increase the CONTRAST B (blue) and decrease the CONTRAST R (red).
To reduce the color temperature: Decrease the CONTRAST B (blue) and increase the CONTRAST R (red).

- If you set all of CONTRAST R, G, and B to negative values, the original brightness of the image can't be obtained even when you maximize CONTRAST in the IMAGE menu.

To optically brighten or darken projected images (AUTO IRIS):

Iris is a function to optically adjust the contrast by opening or closing the aperture of the lamp. This projector is equipped with the following 4 modes to adjust the iris.

AUTO IRIS 1, AUTO IRIS 2, AUTO IRIS 3

Suitable for viewing films in a dim room. Iris is automatically adjusted depending on images to be projected. Select AUTO IRIS 1, 2 or 3 according to your preference.

OPEN

The screen appears brighter.

To adjust the ratio of change in brightness (GAMMA MODE):

You can select a preset gamma mode using the menu.
(See page 25 for menu setting.)

1. Display the IMAGE menu.
2. Select GAMMA MODE by pressing the ▲ or ▼ button.
3. Select your desired gamma mode by pressing the ◀ or ▶ button.

To cancel the menu:

4. Press the MENU button.

To adjust the original ratio of change in brightness (To customize the gamma mode):

To customize (and store) the gamma mode to your preference, carry out the following procedure.
(See page 25 for menu setting.)

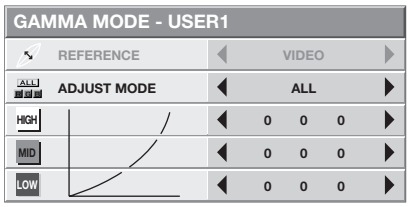

1. Select GAMMA MODE in the IMAGE menu.
2. Press the ◀ or ▶ button to select USER1 ⏎ or USER2 ⏎.
3. Press the ENTER button.
4. Press the ▲ or ▼ button to select REFERENCE.
5. Press the ◀ or ▶ button to select basic gamma curve.
   - Generally, select the most preferable gamma curve from the preset gamma curve.
6. Press the ▲ or ▼ button to select ADJUST MODE.
7. Press the ◀ or ▶ button to adjust mode of gamma curve (ALL, RED, GREEN, or BLUE).
   - Select whether to adjust RED, GREEN, and BLUE collectively or separately.
8. Press the ▲ or ▼ button to select the desired item.
   HIGH : Use to adjust the gradation of the bright scenes. (The values displayed correspond to RED, GREEN, and BLUE from the left respectively.)
   MID : Use to adjust the gradation of the medium brightness scenes. (The values displayed correspond to RED, GREEN, and BLUE from the left respectively.)
   LOW : Use to adjust the gradation of the dark scenes. (The values displayed correspond to RED, GREEN, and BLUE from the left respectively.)
9. Press the ◀ or ▶ button to adjust the selected item.
10. Repeat steps 6 - 7 for optimum adjustment results.

To cancel the menu:

11. Press the MENU button.

To enable the stored gamma mode:

1. Select USER1 or USER2 by pressing the GAMMA button on the remote control.

- Change in the brightness may be hard to recognize in some images.

Noise reduction

This projector has the following noise reduction functions. However, these functions don't work with 720p, 1080i, and 1080p signals and signals supplied from computer.

TRNR (temporal recursive noise reduction)
Reduces random noise appearing in projected images. Adjust the reduction level using the ◀ or ▶ button.

MNR (mosquito noise reduction)
Reduces mosquito noise appearing around sharp edges in DVD images. Adjust the reduction level using the ◀ or ▶ button.

BAR (block artifact removal)
Reduces block noise or mosaic-like patterns appearing in DVD images. Turn on this function using the ◀ or ▶ button.

This projector automatically and properly projects video signals supplied from the computer. However, some video signals may not be projected, depending on the type of the computer. In such a case, press the AUTO POSITION button. (See page 23.) When the signal is still not projected properly, adjust the projected image using the SIGNAL menu.

How to adjust the image supplied from the computer using the menu:

Carry out the following procedures according to the symptoms.

Wide strips appear.	Adjust TRACKING in the SIGNAL menu.
The projected image flickers.	
The projected image is blurred.	Adjust FINE SYNC. in the SIGNAL menu.
The projected image is displaced horizontally.	Adjust HORIZ.POSITION in the SIGNAL menu. Every time the ◀ button is pressed, the image moves to the right. Every time the ▶ button is pressed, the image moves to the left.
The projected image is displaced vertically.	Adjust VERT.POSITION in the SIGNAL menu. Every time the ◀ button is pressed, the image moves down. Every time the ▶ button is pressed, the image moves up.
The top part of the image flags.	Change the setting of HOLD in the SIGNAL menu. Select ON ⏎, press the ENTER button, and adjust BEGIN or END to minimize the flagging.
A solid black or solid white appears in the image.	Adjust CLAMP POSITION or CLAMP WIDTH in the SIGNAL - USER menu.
The motion doesn't run smoothly.	Adjust VERT. SYNC. in the SIGNAL - USER menu. Select AUTO for normal use.
Noise appears on the right or left half of the image.	Adjust SHUTTER(LS) or SHUTTER(RS) in the SIGNAL - USER menu.
Noise appears on the top or bottom part of the image.	Adjust SHUTTER(U) or SHUTTER(L) in the SIGNAL - USER menu.

1. Display the SIGNAL menu.
2. Press the ▲ or ▼ button to select an item to adjust.
3. Adjust the selected item by pressing the ◀ or ▶ button.

To cancel the menu:

4. Press the MENU button.

- Do not change the settings of the SIGNAL menu in normal use.

Simple method to adjust the image position

To adjust the horizontal position:

1. Align the left edge of the image with the left side of the screen by adjusting HORIZ.POSITION. Then, align the right edge of the image with the right side of the screen by adjusting TRACKING.
2. Repeat step 1 above to complete the adjustment of the horizontal position.

To adjust the vertical position:

3. Align the upper edge of the image with the upper side of the screen by adjusting VERT.POSITION.

LPF

You can select whether or not to enable the LPF.
Vertical or horizontal streak noise may appear on the projected image, depending on the type of the DVD player you use. In such a case, you can reduce such streak noise by enabling the LPF. However, projected images become softened slightly.

Password function

This projector is equipped with the password function that is designed for prevention of theft and wrong operation by children and restriction on operation by other than specified users. The password function has two modes as follows.

DISPLAY INPUT ..... When the projector is turned on, the startup screen (or splash screen) will appear and stay on the screen until the password is entered. When the password is entered, the startup screen will switch to the regular operation screen.

MENU ACCESS..... All the buttons except for the POWER button on the projector are disabled. (The buttons on the remote control are enabled.) You can use this mode as a measure of prevention of wrong operation by children and restriction on operation by other than specified users.

To enable the password function:

1. Display the FEATURE menu.
2. Press the ▲ or ▼ button to select PASSWORD FUNCTION.
3. Press the ▶ button to change the mode among DISPLAY INPUT ⏎ and MENU ACCESS ⏎.
   - When the password has already been set, the mode won't be changed. In such cases, press the ENTER button to cancel the password function and try again.
4. Press the ENTER button.
   - The screen for setting the password function will appear.

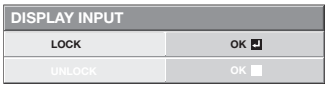

5. Press the ENTER button.
   - The screen for entering a password will appear.

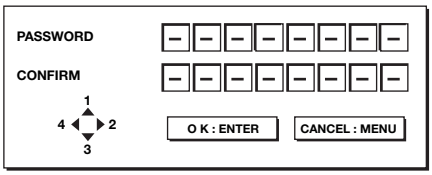

6. Enter a 4 - 8 digit password using the ▲, ▶, ▼ or ◀ buttons on the remote control as shown below.
   (▲=1, ▶=2, ▼=3, ◀ =4)
7. Press the ENTER button.
   - To cancel the procedure, press the MENU button.
8. Enter the password again for confirmation using the same steps.
9. Press the ENTER button.
   - If the entered passwords don't match, an error message will appear.
   - To cancel the procedure, press the MENU button.

To cancel the password function:

1. Display the FEATURE menu.
2. Press the ▲ or ▼ button to select PASSWORD FUNCTION.
3. Press the ENTER button.
   - The screen for canceling the password function will appear.

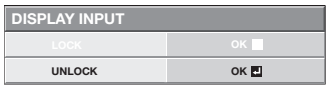

4. Press the ENTER button.
   - The screen for entering the password will appear.

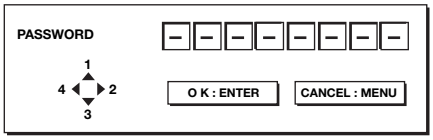

5. Enter a 4 - 8 digit password using the ▲, ▶, ▼ or ◀ buttons on the remote control as shown below.
   (▲=1, ▶=2, ▼=3, ◀ =4)
6. Press the ENTER button.
   - If you enter a wrong password, an error message will appear.
   - To cancel the procedure, press the MENU button.

Important:

- Disable the password by pressing the MENU and ENTER buttons on the control panel at the same time about three seconds.

Kensington Lock

This projector has a Kensington Security Standard connector for use with Kensington MicroSaver Security System. Refer to the information that came with the Kensington System for instructions on how to use it to secure the projector. Please contact Kensington Technology Group below.

Kensington Technology Group
2855 Campus Drive
San Mateo, CA 94403, U.S.A.
Phone: +1- (650)572-2700
Fax: +1- (650)572-9675

Replacing the lamp

This projector is equipped with a lamp to project images. This lamp is a consumable. It may burn out or its brightness may decrease during use. In such cases, replace the lamp with a new one as soon as possible. Be sure to replace the lamp with a new lamp sold separately that is exclusive to this projector. Contact your dealer for purchase of the lamp.

Spare lamp	VLT-HC5000LP

Warning:

- Be careful not to drop the lamp fixing screws inside of the projector. Don't put a metal piece or flammable object into the projector. Using the projector with any foreign object present inside may result in electric shock or fire. When you can't remove the foreign object from the inside, contact your dealer for removal.
- Be sure to install the lamp securely. When the lamp isn't installed properly, it won't illuminate. Improper installation may also result in fire.
- Don't shake the removed lamp or don't lift it above your face. Your eyes may be injured by flying or falling glass fragments.
- Don't replace the lamp immediately after use because the lamp cover will be very hot. You may get burned. Turn off the power using the POWER button. After the lamp goes out, wait about two minutes until the intake and exhaust fans for cooling the lamp stop rotating. Then unplug the power cord, and wait at least one hour to allow the lamp to cool down enough to the touch.
- Do not touch the lamp directly. It may break and cause injury or burn.

Interval of lamp replacement

The recommended interval of lamp replacement is about 5000 hours*1*2 of consecutive use. Such interval differs depending on the operating environment and may be shorter than 5000 hours*1*2. Decrease in luminescence and/or color brightness indicates that the lamp needs to be replaced. When the lamp operation time exceeds 3750 hours*1, the indicator will blink alternately between green and red (while the lamp is lit; when the lamp is not lit, the indicator will be lit red only) and the lamp replacement message will appear on the screen for one minute everytime the lamp is turned on. When the lamp has been used for about 4750 hours*1, the replacement message (LAMP EXCHANGE) will appear on the screen for one minute every 25 hours*1 thereafter.

When the lamp operation time exceeds 5000 hours*1*2, the projector automatically shuts off and can't be used until the lamp is replaced and the lamp operation time is reset.

*1 Duration when LAMP MODE of the INSTALLATION menu is set to LOW. When it is set to STANDARD, this duration will be shorted.

*2 Duration when LAMP MODE is set to STANDARD, this duration will be shorted to 2000 hours.

Caution:

- Don't remove the lamp for any purpose other than replacement. Unnecessary removal of the lamp may result in a breakdown.
- This projector uses a high-pressure mercury lamp as the light source. The high-pressure mercury lamp may explode or fail to illuminate permanently because of an impact, scratch, or deterioration through use. The period of time until explosion or permanent failure to illuminate varies considerably from lamp to lamp, depending on operation conditions. Therefore, the lamp may explode soon after the start of use.
- The possibility of explosion of the lamp increases if you use it beyond its replacement period. When the instruction of lamp replacement appears, replace it with a new one immediately even if the lamp is still lighting normally.
- When the high-pressure mercury lamp explodes, glass fragments will scatter inside or outside the lamp box and the gas charged inside the lamp will diffuse inside or outside the projector. The gas inside the lamp contains mercury. Be careful not to breathe it or avoid it from entering your eye or mouth. If you should breathe it or if it should enter your eye or mouth, see a doctor immediately.
- In the event that the high-pressure mercury lamp exploded, glass fragments may have been scattered inside the projector. Ask your dealer to replace the lamp and to inspect the inside of the projector. When you clean or replace the lamp by yourself, be sure to hold the handle of the lamp. You may get injured by glass fragments.
- When removing the lamp from the ceiling-mounted projector, use the lamp replacement tray packed with the projector or option lamp to prevent glass fragments from scattering.
- Be sure to use the lamp exclusive to this projector, VLT-HC5000LP. Use of other lamps may cause a failure of the projector.

To replace the lamp:

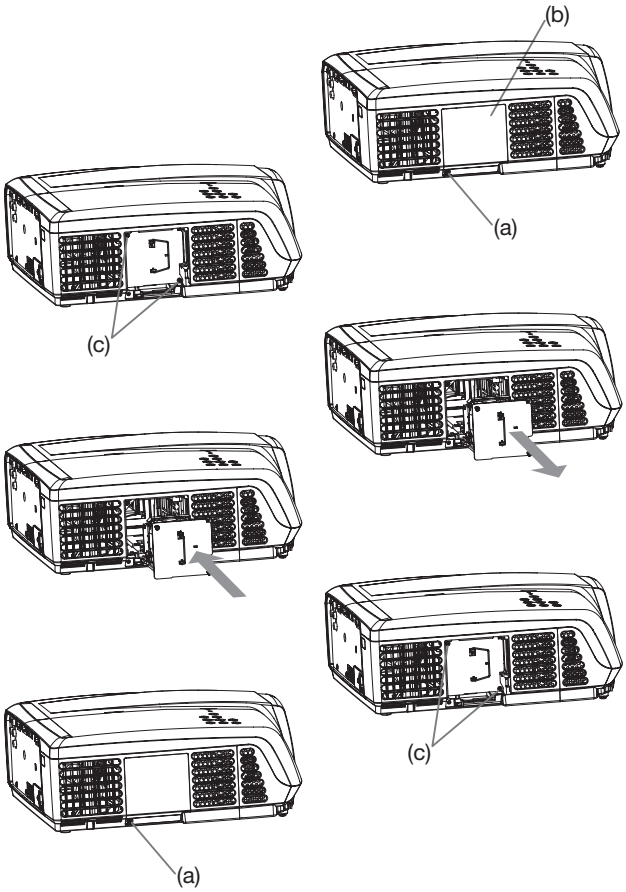

1. Unplug the power cord.
2. Loosen the screw (a) using a Phillips screwdriver (+), and remove the lamp cover (b).
3. Loosen the screws (c) using a Phillips screwdriver (+).
4. Pull the handle.
5. Pull out the lamp box by the handle while holding the projector.
   - Pull the lamp box out of the projector slowly. If it is pulled out quickly, the lamp may break scattering glass fragments.
   - Do not spill liquid on the removed lamp box or do not place it near any flammable object or where children can reach to prevent injury or fire.
6. Load a new lamp box securely into the projector in the right orientation.
7. Put the handle back to the original position.
   - Make sure that the handle is locked.
8. Tighten up the screws (c) using a Phillips screwdriver (+).
9. Tighten up the screw (a) using a Phillips screwdriver (+) to secure the lamp cover.

Reset of the lamp operation time
Plug in the power cord and reset the lamp operation time by holding down the ◀, ▶, and POWER buttons on the control panel at the same time about 3 seconds.

Important:
- Unless these 3 buttons are pressed at the same time, the lamp operation time isn't reset.
- Make sure that the STATUS indicator blinks twice and the lamp operation time is reset successfully.
- The projector doesn't turn on if the lamp cover isn't attached securely.
- Be sure to reset the lamp operation time whenever you replace the lamp.
- Do not reset the lamp operation time unless you replace the lamp.

When removing the lamp from the ceiling-mounted projector
When removing the lamp from the ceiling-mounted projector, use the lamp replacement tray packed with the projector or option lamp to prevent glass fragments from scattering.
- Assemble the lamp replacement tray according to the procedure shown on it.

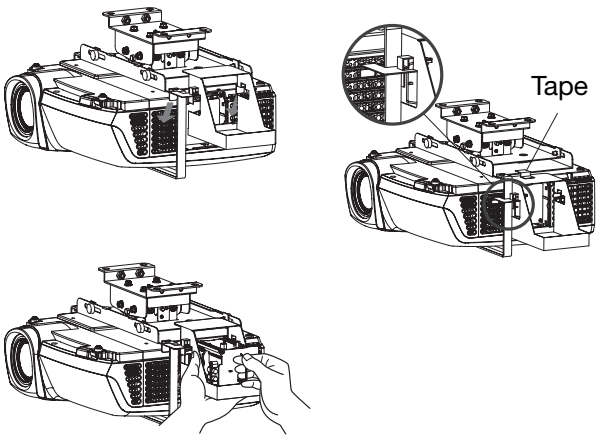

1. Follow steps 1 to 4 shown above.
2. Attach the lamp replacement tray to the projector as shown in the figure.
3. Secure the lamp replacement tray on the projector using the tape packed with the tray.
4. Pull out the lamp box by the handle while holding the projector.
   - Hold the lamp replacement tray to prevent glass fragments from scattering.
   - Don't put the lamp directly on the lamp replacement tray because it may fall.
5. Detach the lamp replacement tray together with the removed lamp.

Important:
- The lamp is fragile. If it is broken, be careful not to cut yourself with glass fragments.
- This projector uses a lamp that contains mercury. Disposal of the lamp or the projector with the lamp may be regulated due to environmental considerations. For disposal or recycling information, please contact your local authorities or the Electronic Industries Alliance: www.eiae.org. (For the U.S. only.)

Maintenance

Warning:
- Never use flammable air duster or other materials when cleaning the air-filter. Flammable substances may ignite causing fire or breakdown when the lamp is illuminated.
- Do not use flammable solvents (benzene, thinner, etc.) and flammable aerosols when cleaning the projector body and lens. Flammable substances may ignite causing fire or breakdown while the lamp is illuminating.

Caution:
Be sure to turn off the lamp and unplug the power cord from the wall outlet before you perform any maintenance on the projector.

Cleaning of the air-filter

Clean the air-filter frequently (about once a month). If the filter or ventilation grilles become clogged with dirt or dust, the temperature inside the projector may rise and cause troubles, such as damage to the inside parts and shortening the life of the panels.
- When the temperature inside the projector rises, the STATUS indicator will blink orange and the lamp will be turned off.

1. Raise the lock of the filter cover in the direction of the arrow.
2. Remove the air-filter.
3. Wash the air-filter or change it with a new filter.
   - Use water or diluted mild detergent to clean the filter. Rinse the filter thoroughly and let it dry completely.
4. Attach the air-filter.
5. Attach the filter cover to the projector.
   - Make sure that the air-filter is attached correctly without displacement.

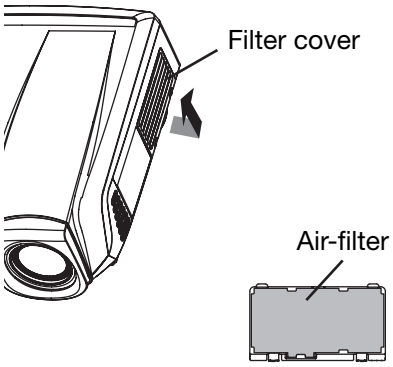

Important:
- If the filter is damaged or becomes extremely dirty, change it with a new filter. Contact your dealer for a new filter.
- Use the dedicated filter only.

Caution:
Be sure to use the projector with an air-filter. If not, dust may get inside the projector causing fire and failure.

Cleaning of the projector and the ventilation slots

Use a soft cloth to clean the projector and the ventilation grilles. When the grilles become dirty, wipe them with a soft cloth dampened with diluted mild detergent, and then wipe them with a dry cloth.

To protect the surface of the projector from fading or deteriorating:
- Do not spray insecticide on or inside the projector.
- Do not use benzine or thinner to clean it.
- Do not let rubber or plastic materials contact with projector.

Cleaning of the lens

Use a standard lens-cleaning brush or a piece of lens tissue dampened with lens cleaning fluid. The lens surface is fragile. Use only recommended, nonabrasive lens-cleaning materials. Do not touch the lens with your fingers.

Troubleshooting

Before asking for repair of the projector, check the following. If the symptom persists, stop using the projector, be sure to unplug the power plug, and then contact your dealer.

No image appears on the screen.

<table>
<tr><th>Problem</th><th>Solution</th></tr>
<tr><td>Power can not be turned on.</td><td>• Check whether the indicators are on or off and how they are lightning.
<table>
<tr><th>POWER</th><th>STATUS</th><th>Solution</th></tr>
<tr><td>○
Off</td><td>○
Off</td><td>• Connect the power cord to the projector.
• Plug the power cord into a wall outlet.</td></tr>
<tr><td rowspan="4">☀
Steady red</td><td>○
Off</td><td>• If any objects are blocking the air inlet or outlet grill, re move them and carry out the following.
1. Unplug the power cord from the wall outlet.
2. Make sure that the projector has cooled off.
3. Plug the power cord into the wall outlet.
4. Press the POWER button.</td></tr>
<tr><td>○ ⇄ ☀
Blinking orange</td><td>• If any objects are blocking the air inlet or outlet grille, remove them.
• Don’t expose the air outlet grilles to hot air emitted from a heating appliance.
• Check whether the filter is clogged with dirt or dust.
→ Clean the filter, if clogged.</td></tr>
<tr><td>○ ⇄ ☀
Blinking green</td><td>• After the STATUS indicator stops blinking, press the POWER button.
• If you unplug the power cord while the fan is rotating, the lamp may not turn on about one minute when you plug the power cord next time.
• The lamp can’t turn on again for one minute after it goes out.
• Press the POWER button several times.</td></tr>
<tr><td>☀
Steady red</td><td>• Replace the lamp. (The lamp is at the end of its life.)</td></tr>
<tr><td rowspan="2">☀ ⇄ ☀
Blinking red/green</td><td>○
Off</td><td>• Attach the lamp cover on the bottom.</td></tr>
<tr><td>☀
Steady
or
○ ⇄ ☀
Blinking</td><td>• Unplug the power cord from the wall outlet and contact your dealer .</td></tr>
</table></td></tr>
<tr><td>No image appears on the screen.</td><td>• Check that the lens cap is removed.
• It may take about one minute for the lamp to light up.
• The lamp fails to light up on rare occasions. In such a case, wait for a few minutes and then try again.
• If the projector was turned off before the lamp was cooled down sufficiently last time, the fan may start rotating and the POWER button may not work after the power cord is plugged. After the fan stops rotating, press the POWER button to turn back on the POWER indicator.
• Check that the intake vent is clean.
• Set SCART INPUT in the FEATURE menu to OFF. (See page 27.)
• Check that the lamp cover is closed. (See page 36.)
• Check that the cables connected to the external devices are not broken.
• When an extension cable is being used, replace it with the supplied cable for check. When images are displayed correctly, add an RGB signal amplifier to the extension cable.
• Check the operation manual of the video device for its connection.</td></tr>
<tr><td>Power turns off.</td><td>• This problem may occur when the intake vent and/or exhaust vents are blocked. (In such a case, the STATUS indicator brinks orange.)
→ Remove the objects blocking the intake vent and/or exhaust vents and then carry out the following procedure.
1. Wait for the intake fan and/or exhaust fan to stop. (Wait until the STATUS indicator goes out.)
2. Unplug the power cord from the wall outlet.
3. Wait about 10 minutes.
4. Plug the power cord into the wall outlet.
5. Press the POWER button.
• When the STATUS indicator is steady red, it is indicating that the lamp should be replaced. Replace the lamp in this case.
• Check that AUTO POWER OFF has been set to OFF.
• If the lamp has deteriorated, it may go out after a while it illuminates.</td></tr>
</table>

No image appears on the screen. (continued)

Problem	Solution
The screen for entering the password appears.	• PASSWORD FUNCTION in the FEATURE menu has been set to DISPLAY INPUT to enable the password lock. → Enter the password or contact the person in charge of management of the projector. (See page 34.)
"NO SIGNAL" is displayed.	• Turn on the power of the connected device, or check whether there is something wrong with the connected device. • Check whether the external device output signals. (Check this especially when the external device is a notebook computer.) • Check that the cable connected to the external device isn't defective. • Check that the projector is connected to the external device using the correct terminals. • Check that the connected device is correctly selected as the input source. • When an extension cord is being used, replace it with the supplied cable and check whether images are projected correctly. If images are projected correctly, use an RGB signal amplifier along with the extension cord.

Images are not displayed correctly.

Problem	Solution
Projected images are shaking. Projected images are displaced.	• Check that the cable connected to the external device isn't intermittent. • Connect the cable's plug with the external device's connector firmly. • Press the AUTO POSITION button. • Some computers output out-of-spec signals on rare occasion. Adjust the SIGNAL menu. (See page 33.)
Projected images are distorted.	• Adjust the projector and the screen so that they are perpendicular to each other. (See page 10.)
Projected images are dark.	• Adjust BRIGHTNESS and CONTRAST in the IMAGE menu. (See page 30.) • Replace the lamp. (See page 35.)
Projected images are blurred.	• Adjust the focus. (See pages 17 and 22.) • Clean the lens. • Press the ◀ or ▶ button on the remote control to eliminate flicker. • Adjust TRACKING and FINE SYNC. in the SIGNAL menu. (See page 33.) • Adjust BRIGHTNESS and CONTRAST in the IMAGE menu. (See page 30.) • Adjust the projector and the screen so that they are perpendicular to each other. (See page 10.)
Afterimages persist on the screen.	• This phenomenon is improved by keeping projecting an evenly dark image. (Such "image burn-in" phenomenon where afterimages persist on the screen may occur if a stationary image is kept displayed on the screen for a long time.)
Red, blue, and green dots appear in projected images. Black dots appear in projected images.	• This phenomenon is unique to LCD projector and isn't a product malfunction. (A small number of pixels always stay on or off, which are not malfunctions. More than 99.99% of the pixels are effective.)
Fine streaks are seen on projected images.	• This is due to interference with the screen surface and is not a malfunction. Replace the screen or displace the focus a little. • Vertical or horizontal streak noise may appear on the projected image, depending on the type of the DVD player or game console you use. In such a case, you can reduce such streak noise by enabling the LPF.
Projected images become wavy.	• Connect the plugs of the cables to external devices securely. • Keep the projector away from devices that emit interfering radio waves.
Hue is not appropriate.	• Check that the cables connected to the external devices are not broken.
Tint in projected images is incorrect.	• Check that COMPUTER INPUT in the SIGNAL menu is correctly set. (See page 28.) • Check that the cable connected to the external device isn't broken.

Images are not displayed correctly. (continued)

Problem	Solution
Different color tint.	• When comparing images projected by two projectors, tints in the displayed images may be different because of variation between their optical components. This is not a malfunction. • When comparing the image projected by this projector with those displayed on the television or PC monitor, tints in the displayed images may be different because of difference in the range of color reproducibility. This is not a malfunction.
Only the motion areas in the images supplied from the computer aren't displayed.	• This is caused by the computer being used. Contact the manufacturer of your computer.
Projected images are obscured.	• Match the output resolution of your computer with the resolution of the projector. For the method to change the output resolution of the computer, contact the manufacturer of your computer. (See page 43.)

Others

Problem	Solution
The exhaust vents emit warm air.	• This air comes out after cooling the inside of the projector. You may feel hot, but this is not a malfunction.
The menu can't be used.	• The microcomputers inside the projector may be wrongly operating because of noise. → Press the POWER button to turn off the lamp and wait about 2 minutes. Then unplug the power cord from the outlet, wait at least 10 minutes, and plug the power cord back into the outlet. When the POWER button doesn't function, unplug the power cord from the outlet, wait at least 10 minutes, and then plug the power cord back into the outlet.
"TEMPERATURE!!" is displayed.	• This indication appears when the ambient temperature rises high. When the ambient temperature stays high, the lamp goes out. → Eliminate any causes of the rise in the ambient temperature. • This indication appears when the air inlet or outlet grille is blocked. When they are kept blocked, the lamp goes out. → Remove the objects blocking the air inlet or outlet grille. Clean the filter, if clogged.
The ⃠ mark appears.	• This mark appears when ineffective operation is carried out. This isn't a product malfunction.
The remote control doesn't function easily or at all.	• Check that the batteries are loaded in the remote control or the batteries are not weak. (See page 6.) • Check that the remote control sensor isn't exposed to direct sunlight or fluorescent light. (See page 9.) • Use the remote control within its operation range. (See page 9.) • Use the remote control at least 10 cm away from the projector.
The buttons on the control panel (except for the POWER button) don't function.	• PASSWORD FUNCTION in the FEATURE menu has been set to MENU ACCESS to enable the password lock. → Cancel the password lock or contact the person in charge of management of the projector. (See page 34.)

If the following problem occurs after the lamp is replaced, check the following first.

Problem	Solution
The projector does not turn on.	• Fit the lamp cover securely. (See pages 35 and 36.) • Reset the lamp operating time. (See page 36.)
The STATUS indicator blinks.	• Reset the lamp operating time. (See page 36.)

Indicators

This projector has two indicators, each of which shows the operation condition of the projector.
The following offer solutions to possible problems. If these problem persist, turn the projector off and consult your dealer.

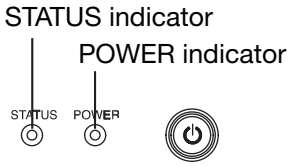

Normal condition

POWER	STATUS	CONDITION	NOTE
Steady red	Off	Stand-by	
Steady green	Blinking green	Lamp stand-by (about 1 minute)	The POWER button cannot be used to switch between on and off.
Steady green	Steady green	The power is on. (Normal condition)	

Abnormal condition

POWER	STATUS	CONDITION	POSSIBLE SOLUTION
Steady green or Steady red	Blinking orange	Abnormal temperature • The ventilation grilles are clogged with dust or dirt. • The room temperature is high.	• Clean the ventilation grilles. • Relocate the projector to a cooler place.
Steady red	Blinking green	The protection circuit is working or the lamp is in an abnormal condition.	• Wait until the STATUS indicator goes out, then press the POWER button. • If the above solution is not effective, replace the lamp.
Steady green	Blinking green/red	Lamp operation time warning. (Total lamp operation time reached 3750 hours*1 while the power was on.)	Replace the lamp. Change with a new lamp if this problem recurs.
Steady red	Blinking red	Lamp operation time warning. (Total lamp operation time reached 3750 hours*1 while the power was off.)	
Steady red	Steady red	Lamp operation time warning. (Total lamp operation time reached 5000 hours*1*2 while the power was off.)	
Blinking green/red	Off	The lamp cover isn't closed.	Close the cover correctly.
Blinking green/red	Steady or Blinking	Abnormal.	Contact your dealer.

* 1 Duration when LAMP MODE of the INSTALLATION menu is set to LOW. When it is set to STANDARD, this duration will be shorted.
* 2 Duration when LAMP MODE is set to STANDARD, this duration will be shorted up to 2000 hours.

Specifications

The specifications and outside appearance of the projector are subject to change without prior notice.

Type		LCD projector
Model		HC5000
Display technology		0.74-inch LCD panel: 3 pieces (for R, G, B) (aspect ratio 16:9) Pixel: 1920 x 1080 = 2073600 pixels Total 6220800 pixels
Projection lens		F 1.8 - 2.3 f= 23.5 - 37.6 mm
Light-source lamp		160 W
Image size (projection distance)		50” min. to 300” max. (projection distance 1.5 to 9.5 m (max. Zoom))
Maximum resolution	Computer signal	Maximum resolution: 1280 x 1024 dots Panel resolution: 1920 x 1080 dots
	Video signal	NTSC/PAL/SECAM/4.43NTSC/PAL-M/PAL-N/PAL-60
	Component signal	480i, 480p, 576i, 576p, 720p, 1080i, 1080p Panel resolution: 1920 x 1080 dots
Computer input		[Signal type] [Terminal type] [Line] Analog RGB Mini D-SUB 15-pin 1 Digital RGB DVI-D(HDCP) 1
Video input		[Signal type] [Terminal type] [Line] HDMI HDMI 1 Video input RCA 1 S-video input S 1 Component video input RCA x3 (YC_BC_R/YP_BP_R) 1
Control terminal/ others	SERIAL	RS-232C (D-SUB 9-pin)
	TRIGGER	DC 12 V, max. 200 mA (stereo mini jack)
Operating temperatures		+41°F (+5°C) to +95°F (+35°C)
Rated voltage		AC100 - 240 V, 50/60 Hz
Power consumption		2.5 A
Dimensions		334 mm (W) x 125 mm (H) x 352 mm (D) * Not including protrusion.
Weight		5.6 kg
Others	S-video input	Luminance signal: Vp-p=1.0 V 75 Ω (negative sync) Chrominance signals: Vp-p=0.286 V 75 Ω (burst signal)
	Video input	Vp-p=1.0 V 75 Ω (negative sync)
	Component video input	YC_BC_R: Vp-p=1.0 V 75Ω (Y) (negative sync) Vp-p=0.7 V 75 Ω (C_B, C_R)
	Analog input	RGB: Vp-p=0.7 V 75 Ω (negative sync) YC_BC_R: Vp-p=1.0 V (Y) (negative sync) Vp-p=0.7 V (C_B, C_R) HD/CS: TTL-level (negative or positive polarity) VD: TTL-level (negative or positive polarity)
	Digital input (HDMI)	HDMI interface (TMDS single link)
	Digital input (DVI)	DVI-D interface (TMDS single link) with HDCP

Dimension drawings (unit: mm)

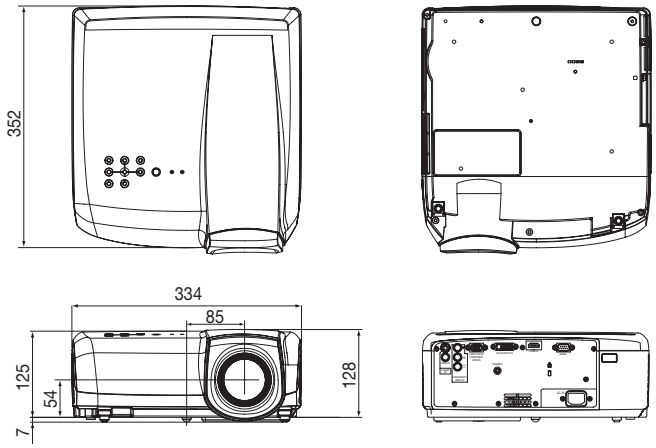

Specification of RGB signals in each computer mode of the projector

Signal mode	Resolution (H x V)	Horizontal frequency (kHz)	Vertical frequency (Hz)	Normal mode (H x V)*1	
TV60, 480i (525i)	–	15.73	59.94	1920 x 1080	*2
TV50, 576i (625i)	–	15.63	50.00	1920 x 1080	*2
1080i 60 (1125i 60)	–	33.75	60.00	1920 x 1080	*2,*3
1080i 50 (1125i 50)	–	28.13	50.00	1920 x 1080	*2,*3
480p (525p)	–	31.47	59.94	1920 x 1080	*2,*3
576p (625p)	–	31.25	50.00	1920 x 1080	*2,*3
720p 60 (750p 60)	–	45.00	60.00	1920 x 1080	*2,*3
720p 50 (750p 50)	–	37.50	50.00	1920 x 1080	*2,*3
1080p 60 (1125p 60)	–	67.50	60.00	1920 x 1080	*2,*3
1080p 50 (1125p 50)	–	56.25	50.00	1920 x 1080	*2,*3
PC98	640 x 400	24.82	56.42	1728 x 1080	
CGA70	640 x 400	31.47	70.09	1728 x 1080	
VGA60	640 x 480	31.47	59.94	1440 x 1080	*2,*3
VGA72	640 x 480	37.86	72.81	1440 x 1080	
VGA75	640 x 480	37.50	75.00	1440 x 1080	
VGA85	640 x 480	43.27	85.01	1440 x 1080	
SVGA56	800 x 600	35.16	56.25	1440 x 1080	
SVGA60	800 x 600	37.88	60.32	1440 x 1080	*2,*3
SVGA72	800 x 600	48.08	72.19	1440 x 1080	
SVGA75	800 x 600	46.88	75.00	1440 x 1080	
SVGA85	800 x 600	53.67	85.06	1440 x 1080	
XGA60	1024 x 768	48.36	60.00	1440 x 1080	*2,*3
XGA70	1024 x 768	56.48	70.07	1440 x 1080	
XGA75	1024 x 768	60.02	75.03	1440 x 1080	
XGA85	1024 x 768	68.68	85.00	1440 x 1080	
MAC13	640 x 480	35.00	66.67	1440 x 1080	
MAC16	832 x 624	49.72	74.55	1440 x 1080	
MAC19	1024 x 768	60.24	75.02	1440 x 1080	
HP75	1024 x 768	62.94	74.92	1440 x 1080	
SXGA60	1280 x 1024	60.02	63.98	1350 x 1080	*2,*3

*1: When ASPECT in the FEATURE menu is set to AUTO.
*2: Available for the signal from the HDMI IN terminal.
*3: Available for the signal from the DVI-D(HDCP) IN terminal.

Important:
- Some computers aren't compatible with the projector.
- The projector's maximum resolution is 1920 x 1080 pixels. It may not display images of higher resolutions than 1920 x 1080 correctly.
- If the resolution and frequency of your computer aren't shown on the table, find the compatible resolution and frequency by changing the resolution of your computer.
- This projector doesn't support 480p signals from video devices having 4 lines (R, G, B, CS*) or having 5 lines (R, G, B, H, V).
  * : Composite Sync

Connectors

SERIAL (D-SUB 9-pin)

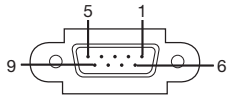

Pin No.	Name	I/O
1	–	–
2	TXD	IN
3	RXD	OUT
4	–	–
5	GND	–
6	–	–
7	–	–
8	–	–
9	–	–

COMPUTER IN/COMPONENT VIDEO IN
(Mini D-SUB 15-pin)

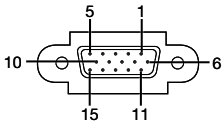

Pin No.	Spec.
1	R(RED)/C_R
2	G(GREEN)/Y
3	B(BLUE)/C_B
4	GND
5	GND
6	GND
7	GND
8	GND
9	DDC 5V
10	GND
11	GND
12	DDC Data
13	HD/CS
14	VD
15	DDC Clock

HDMI IN
(HDMI 19-pin)

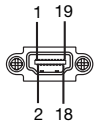

PIN No.	Spec.	PIN No.	Spec.
1	TMDS Data2+	11	TMDS Clock Shield
2	TMDS Data2 Shield	12	TMDS Clock-
3	TMDS Data2-	13	–
4	TMDS Data1+	14	–
5	TMDS Data1 Shield	15	SCL
6	TMDS Data1-	16	SDA
7	TMDS Data0+	17	DDC Ground
8	TMDS Data0 Shield	18	+5 V Power
9	TMDS Data0-	19	Hot Plug Detect
10	TMDS Clock+		

DVI-D (HDCP) IN
(DVI-D 24-pin)

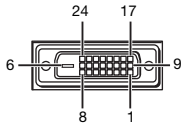

PIN No.	Spec.	PIN No.	Spec.
1	TMDS Data 2-	13	–
2	TMDS Data 2+	14	+5V Power
3	TMDS Data 2 Shield	15	Ground (for +5V)
4	–	16	Hot Plug Detect
5	–	17	TMDS Data 0-
6	DDC Clock	18	TMDS Data 0+
7	DDC Data	19	TMDS Data 0 Shield
8	–	20	–
9	TMDS Data 1-	21	–
10	TMDS Data 1+	22	TMDS Clock Shield
11	TMDS Data 1 Shield	23	TMDS Clock+
12	–	24	TMDS Clock-

Replacement part
(Option/not included in the box)

Spare lamp VLT-HC5000LP

MITSUBISHI Projector Contact Information

North America

MESCA (Mitsubishi Electric Sales Canada Inc.)
http://www.mitsubishielectric.ca
Information Technologies Group, 4299 14th Avenue, Markham, Ontario L3R 0J2, Canada
Sales & Technical Inquires
Phone :+1-(800) 450-6487
Fax :+1-(905) 475-7958
E-mail :projectors@mitsubishielectric.ca
Customer Care
E-mail :support@mitsubishielectric.ca

MDEA (Mitsubishi Digital Electronics America, Inc.)
(Warranty Registration)
http://www.mitsubishi-presentations.com/
Presentation Products Division, 9351 Jeronimo Road, Irvine, CA 92618 U.S.A
Sales & Inquires
Phone :+1(888) 307-0349 or +1(949)465-6000
E-mail :ppdinfo@mdea.com
Technical Inquires
Phone :+1-(888) 307-0309
E-mail :TSUPPORT@mdea.com

Europe

MEU-FRA (Mitsubishi Electric Europe B.V French Branch)
25, Boulevard des Bouvets 92 741, Nanterre CEDEX, France
Sales Inquiries
Phone :+33 (0)1 55-68-55-53
Fax :+33 (0)1 55-68-57-31
Techinical Inquireis
Phone :+33 (0)1 55-68-56-42
Fax :+33 (0)1 55-68-57-31

MEU-GER (Mitsubishi Electric Europe B.V. German Branch)
http://www.mitsubishi-evs.de/
Gothaer Strasse 8, 40880 Ratingen, Germany
Sales Inquires
Phone :0049 - 2102 - 486 9250
Fax :0049 - 2102 - 486 7320
Techinical Inquires
Phone :0049 - 2102 - 486 1330
Fax :0049 - 2102 - 486 1340

MEU-IR (Mitsubishi Electric Europe B.V. Irish Branch)
http://www.mitsubishi.ie/
Westgate Business Park, Ballymount, Dublin 24, Ireland
Sales Inquiries
Phone :+353-1-4198807
Fax :+353-1-4198890
Technical Inqiries
Phone :+353-1-4198808
Fax :+353-1-4198895

MEU-IT (Mitsubishi Electric Europe B.V. Italian Branch)
Centro Direzionale Colleoni, Palazzo Sirio, Viale Colleoni 7, 20041 Agrate Brianza, Italy
Sales & Technical Inquiries
Phone :+39-(0)39-60531
Fax :+39-(0)39-6053214
E-mail :info.projector@it.mee.com

MEU-NL (Mitsubishi Electric Europe B.V. Benelux Branch)
http://www.mitsubishi.nl/LCD/ProdFrame.html
Nijverheidsweg 23A, 3641 RP Mijdrecht, The Netherlands
Sales Inquiries
Phone :+31-297-282461
Fax :+31-297-283936
E-mail :info@mitsubishi.nl
Techinical Inquiries
Phone :+31-297-282461
Fax :+31-297-283936
E-mail :info@mitsubishi.nl

Russia (Mitsubishi Electric Europe B.V Moscow Representative Office)
http://www.mitsubishi-projector.ru/
Moscow Representative Office, 52/5 Kosmodamianskaya Nab., 115054, Moscow, Russia
Sales & Techinical Inquiries
Phone :(7095) 721-2068
Fax :(7095) 721-2071

MEU-SP (Mitsubishi Electric Europe B.V. Spanish Branch)
http://www.mitsubishielectric.es/
Ctra. de Rubi, 76-80, 08173 Sant Cugat del Valles, Barcelona, Spain
Sales Inquiries
Phone :+34-93.565.31.54
Fax :+34-93.589.43.88
E-mail :mitsubishi.profesional@sp.mee.com
Technical Inquiries
Phone :+34-93.586.27.51
Fax :+34-93.588.53.87
E-mail :mitsubishi.profesional@sp.mee.com

MEU-SWE (Mitsubishi Electric Europe B.V Scandinavian Branch)
Hammarbacken 14, Box 750, S-19127, Sollentuna, Sweden
Sales Inquiries
Phone :+46-(0)8-6251070
Fax :+46-(0)8-6251036
Technical Inquiries
Phone :+46-(0)8-6251052
Fax :+46-(0)8-6251036

MEU-UK (Mitsubishi Electric Europe)
http://www.mitsubishi.co.uk/evs/
Visual Information Systems Division, Travellers Lane, Hatfield, Hertfordshire, AL10 8XB U.K.
Sales Inqiries
Phone :+44 (1707) 278684
Fax :+44 (1707) 278541
E-mail :projector.info@meuk.mee.com
Technical Inquiries
Phone :+44 (870) 606 5008
Fax :+44 (1506) 431927
E-mail :projector.info@meuk.mee.com

Asia

CHINA (Mitsubishi Electric Air-Conditioning & Visual Information Systems (Shanghai) Ltd.)
26/F., Oriental Center, 699 Nanjing Rd(W), Shanghai, 200041,China
Sales Inquiries
Phone :+86(21) 5211-0882-3002
Fax :+86(21) 5211-0576
Technical Inquiries
Phone :+86(21) 5211-0882-3020
Fax :+86(21) 5211-0576

HONG KONG (Mitsubishi Electric Ryoden Air-Conditioning & Visual Information Systems (HongKong) Ltd.)
7th Floor, Manulife Tower, 169 Electric Road, North Point, Hong Kong
Sales Inquiries
Phone :+852-2510-1505
Fax :+852-2510-0463
Technical Inquiries
Phone :+852-2422-0161
Fax :+852-2487-0181

SINGAPORE (Mitsubishi Electric Asia Pte. Ltd.)
http://www.mitsubishielectric.com.sg
307, Alexandra Road, #05-01/02 Mitsubishi Electric Building, Singapore 159943
Sales Inquiries
Phone :+65-6473-2308
Fax :+65-6475-9503
E-mail :Peripherals@asia.meap.com
Technical Inquiries
Phone :+65-6470-2666
Fax :+65-6475-9503

INDIA (Mitsubishi Electric Asia Pte. Ltd.)
307, Alexandra Road, #05-01/02 Mitsubishi Electric Building, Singapore 159943
Sales Inquiries
Phone :+65-6473-2308
Fax :+65-6475-9503
E-mail :Peripherals@asia.meap.com
Technical Inquiries
Phone :+65-6470-2666
Fax :+65-6475-9503

INDONESIA (Mitsubishi Electric Asia Pte. Ltd.)
307, Alexandra Road, #05-01/02 Mitsubishi Electric Building, Singapore 159943
Sales Inqiries
Phone :+65-6473-2308
Fax :+65-6475-9503
E-mail :Peripherals@asia.meap.com
Technical Inquiries
Phone :+65-6470-2666
Fax :+65-6475-9503

PHILLIPINES (Mitsubishi Electric Asia Pte. Ltd.)
http://www.mitsubishielectric.com.sg
307, Alexandra Road, #05-01/02 Mitsubishi Electric Building, Singapore 159943
Sales Inquiries
Phone :+65-6473-2308
Fax :+65-6475-9503
E-mail :Peripherals@asia.meap.com
Technical Inqiries
Phone :+65-6470-2666
Fax :+65-6475-9503

VIETNAM (Mitsubishi Electric Asia Pte. Ltd.)
307, Alexandra Road, #05-01/02 Mitsubishi Electric Building, Singapore 159943
Sales Inquiries
Phone :+65-6473-2308
Fax :+65-6475-9503
E-mail :Peripherals@asia.meap.com
Technical Inquiries
Phone :+65-6470-2666
Fax :+65-6475-9503

STC (Setsuyo Astec Corporation Seoul Branch)
4F,Dongseo Game Channel Bldg,660-11 Deungchon-Dong, Kangseo-Ku, Seoul, Korea
Sales & Technical Inqiries
Phone :+82-(0)2-2657-9841~3
Fax :+82-(0)2-2657-9900

MALAYSIA (Antah Melco Sales & Services Sdn. Bhd.)
6, Jalan 13/6 46860 Petaling Jaya Selangor, Darul Ehsan, Malaysia
Sales & Technical Inquiries
Phone :+60-(0)3-79552088 (Ext. 203)
Fax :+60-(0)3-79563950/+60-(0)3-79582576
Technical & Service Inquiries
Phone :+60-(0)3-79552088 (Ext. 106)
Fax :+60-(0)3-79563950/+60-(0)3-79582576

ME-TWN (Mitsubishi Electric Taiwan Co., Ltd.)
http://www.MitsubishiElectric.com.tw
11TH FL., 90 SEC. 6, CHUNG SHAN N. RD., TAIPEI, 111 R.O.C.
Sales & Technical Inquires
Phone :+886-2-2832-8255
Fax :+886-2-2833-9813

MKY (Mitsubishi Electric Kang Yong Watana Co., Ltd.)
http://www.mitsubishi-kyw.co.th/
Road, Huamark Bangkapi, Bangkok 10240, Thailand
Sales & Technical Inquiries
Phone :+66-2-731-6841
Fax :+66-2-379-4763

Oceania

ME-AUST (Mitsubishi Electric Australia)
http://www.mitsubishi-electric.com.au/prod.asp?prod=proj
348 Victoria Road, Rydalmere, N.S.W. 2116, Australia Sales & Technical Inqiries
Phone :+(612)9684-7777
Fax :+(612)9684-7208
E-mail :diamonddigital@meaust.meap.com
Technical Inquiries
Phone :+(612)9684-7694
Fax :+(612)9684-7684
E-mail :service@meaust.meap.com

BDT (Black Diamond Technologies Ltd.)
(Warranty Registration) http://www.bdt.co.nz/projectors/warranty.asp
1 Parliament St, Lower Hutt, Wellington, New ZealandSales Inquiries
Phone :+64-(0)4-560-9100
Fax :+64-(0)4-560-9133
E-mail :projectorsales@bdt.co.nz
Technical Inquiries
Phone :+64-(0)4-560-9100
Fax :+64-(0)4-560-9133
E-mail :service@bdt.co.nz

MITSUBISHI ELECTRIC CORPORATION
1 Zusho Baba, Nagaokakyo-City, Kyoto Japan