MITSUBISHI ELECTRIC

sRGB

DLP™ PROJECTOR

MODEL

XD3200U

User Manual

HDMI™
HIGH-DEFINITION MULTIMEDIA INTERFACE

XD3200

This User Manual is important to you.
Please read it before using your projector.

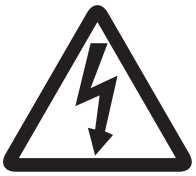

CAUTION

RISK OF ELECTRIC SHOCK
DO NOT OPEN

CAUTION: TO REDUCE THE RISK OF ELECTRIC SHOCK, DO NOT REMOVE COVER (OR BACK)
NO USER-SERVICEABLE PARTS INSIDE
REFER SERVICING TO QUALIFIED SERVICE PERSONNEL.

The lightning flash with arrowhead symbol within an equilateral triangle is intended to alert the user to the presence of uninsulated “dangerous voltage” within the product’s enclosure that may be of sufficient magnitude to constitute a risk of electric shock.

The exclamation point within an equilateral triangle is intended to alert the user to the presence of important operating and maintenance (servicing) instructions in the literature accompanying the appliance.

WARNING:

TO PREVENT FIRE OR SHOCK HAZARD, DO NOT EXPOSE THIS APPLIANCE TO RAIN OR MOISTURE.

CAUTION:

TO PREVENT ELECTRIC SHOCK, DO NOT USE THIS (POLARIZED) PLUG WITH AN EXTENSION CORD, RECEPTACLE OR OTHER OUTLET UNLESS THE BLADES CAN BE FULLY INSERTED TO PREVENT BLADE EXPOSURE.

NOTE:

SINCE THIS PROJECTOR IS PLUGGABLE EQUIPMENT, THE SOCKET-OUTLET SHALL BE INSTALLED NEAR THE EQUIPMENT AND SHALL BE EASILY ACCESSIBLE.

WARNING

Use the attached specified power supply cord. If you use another power supply cord, it may cause interference with radio and television reception.

This apparatus must be grounded.

DO NOT LOOK DIRECTLY INTO THE LENS WHEN THE PROJECTOR IS IN THE POWER ON MODE.

CAUTION

Not for use in a computer room as defined in the Standard for the Protection of Electronic Computer/ Data Processing Equipment, ANSI/NFPA 75.

Contents

Important safeguards 4
Preparing your projector 6
Using the remote control 9
Setting up your projector 10
Viewing computer images 13
Viewing video images 19
Menu operation 25
Adjusting projected images 33
Advanced features 37
Indicators 42
Replacing the lamp 43
Maintenance 45
Troubleshooting 46
Specifications 50

Trademark, Registered trademark

- DLP™, Digital Micromirror Device, DMD and BrilliantColor™ are all trademarks of Texas Instruments.
- HDMI, the HDMI logo and High-Definition Multimedia Interface are trademarks or registered trademarks of HDMI Licensing LLC.
- The trademark of PJLink is trademark applied for registration or registered trademark in Japan, the United States, and other countries and areas.
- Other brand or product names are trademarks or registered trademarks of their respective holders.

Important safeguards

Please read all these instructions regarding your projector and retain them for future reference. Follow all warnings and instructions marked on the projector.

1. Read instructions
   All the safety and operating instructions should be read before the appliance is operated.
2. Retain instructions
   The safety and operating instructions should be retained for future reference.
3. Warnings
   All warnings on the appliance and in the operating instructions should be adhered to.
4. Instructions
   All operating instructions must be followed.
5. Cleaning
   Unplug this projector from the wall outlet before cleaning it. Do not use liquid aerosol cleaners. Use a damp soft cloth for cleaning.
6. Attachments and equipment
   Never add any attachments and/or equipment without the approval of the manufacturer as such additions may result in the risk of fire, electric shock or other personal injury.
7. Water and moisture
   Do not use this projector near water or in contact with water.
8. Accessories
   Do not place this projector on an unstable cart, stand, tripod, bracket or table. Use only with a cart, stand, tripod bracket, or table recommended by the manufacturer or sold with the projector. Any mounting of the appliance should follow the manufacturer's instructions and should use a mounting accessory recommended by the manufacturer.

   An appliance and cart combination should be moved with care. Quick stops, excessive force and uneven surfaces may cause the appliance and cart combination to overturn.
9. Ventilation
   Slots and openings in the cabinet are provided for ventilation, ensuring reliable operation of the projector and to protect it from overheating. Do not block these openings or allow them to be blocked by placing the projector on a bed, sofa, rug, or bookcase. Ensure that there is adequate ventilation and that the manufacturer's instructions have been adhered to.
10. Power sources
    This projector should be operated only from the type of power source indicated on the marking label. If you are not sure of the type of power, please consult your appliance dealer or local power company.
11. Power-cord protection
    Power-supply cords should be routed so that they are not likely to be walked on or pinched by items placed upon or against them. Pay particular attention to cords at plugs, convenience receptacles, and points where they exit from the appliance. Do not put the power cord under a carpet.
12. Overloading
    Do not overload wall outlets and extension cords as this can result in a fire or electric shock.
13. Objects and liquids
    Never push objects of any kind through openings of this projector as they may touch dangerous voltage points or short-out parts that could result in a fire or electric shock. Never spill liquid of any kind on the projector.
14. Servicing
    Do not attempt to service this projector by yourself. Refer all servicing to qualified service personnel.
15. Damage requiring service
    Unplug this projector from the wall outlet and refer servicing to qualified service personnel under the following conditions:
    (a) If the power-supply cord or plug is damaged.
    (b) If liquid has been spilled, or objects have fallen into the projector.
    (c) If the projector does not operate normally after you follow the operating instructions. Adjust only those controls that are covered by the operating instructions. An improper adjustment of other controls may result in damage and may often require extensive work by a qualified technician to restore the projector to its normal operation.
    (d) If the projector has been exposed to rain or water.
    (e) If the projector has been dropped or the cabinet has been damaged.
    (f) If the projector exhibits a distinct change in performance - this indicates a need for service.
16. Replacement parts
    When replacement parts are required, be sure that the service technician has used replacement parts specified by the manufacturer or parts having the same characteristics as the original part. Unauthorized substitutions may result in fire, electric shock or other hazards.
17. Safety check
    Upon completion of any service or repair to this projector, ask the service technician to perform safety checks determining that the projector is in a safe operating condition.

WARNING:

Unplug immediately if there is something wrong with your projector.
Do not operate if smoke, strange noise or odor comes out of your projector. It might cause fire or electric shock. In this case, unplug immediately and contact your dealer.

Never remove the cabinet.
This projector contains high voltage circuitry. An inadvertent contact may result in an electric shock. Except as specifically explained in the User Manual do not attempt to service this product by yourself. Please contact your dealer when you want to fix, adjust or inspect the projector.

Do not modify this equipment.
It can lead to fire or electric shock.

Do not keep using the damaged projector.
If the projector is dropped and the cabinet is damaged, unplug the projector and contact your dealer for inspection. It may lead to fire if you keep using the damaged projector.

Do not face the projector lens to the sun.
It can lead to fire.

Use correct voltage.
If you use incorrect voltage, it can lead to fire.

Do not place the projector on uneven surface.
Place the projection on a leveled and stable surface only. Please do not place equipment on unstable surfaces.

Do not look into the lens when it is operating.
It may hurt your eyes. Never let children look into the lens when it is on.

Do not touch the air outlet grille and bottom plate, which become hot.
Do not touch them or put other equipment in front of the air outlet grille. The air outlet grille and bottom plate, when heated, may cause injury or damage to other equipment. Also, do not set the projector on the desk which is easily affected by heat.

Do not look into the air outlet grille when projector is operating.
Heat, dust, etc. may blow out of it and hurt your eyes.

Do not insert your fingers in the space between the lens and the cabinet.
The lens may shift causing injury or damage to the projector.

Do not block the air inlet and outlet grilles.
If they are blocked, heat may be generated inside the projector, causing deterioration in the projector quality and fire.

Do not use flammable solvents (benzene, thinner, etc.) and flammable aerosols near the projector.
Flammable substances may ignite causing fire or breakdown because the temperature inside the projector rises very high while the lamp is illuminating.

Do not use the projector with condensation on it.
It can lead to breakdown or other failure.

Place of installation
For safety's sake, refrain from setting the projector at any place subjected to high temperature and high humidity. Please maintain an operating temperature, humidity, and altitude as specified below.

- Operating temperature: between +41°F (+5°C) and +95°F (+35°C)
- Operating humidity: between 30% and 90%
- Never put any heat-producing device under the projector so that the projector does not overheat.
- Do not attach the projector to a place that is unstable or subjected to vibration.
- Do not install the projector near any equipment that produces a strong magnetic field. Also refrain from installing near the projector any cable carrying a large current.
- Place the projector on a solid, vibration free surface; otherwise it may fall, causing serious injury to a child or adult, and serious damage to the product.
- Do not stand the projector; it may fall, causing serious injury and damage to the projector.
- Slanting the projector more than ±10° (right and left) or ±15° (front and rear) may cause trouble or explosion of the lamp.
- Do not place the projector near air-conditioning unit, heater, or humidifier to avoid hot or moist air to the exhaust and ventilation hole of the projector.

Preparing your projector

Checking accessories

The following accessories are provided with this projector. Check to be sure that all of the accessories are packed in the package.

■ Cables

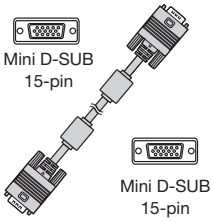

RGB cable for PC
(246C597-10)

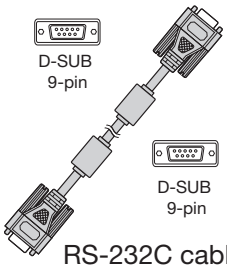

RS-232C cable
(246C598-10)

- Used for projector control by computer.

■ Power supply parts

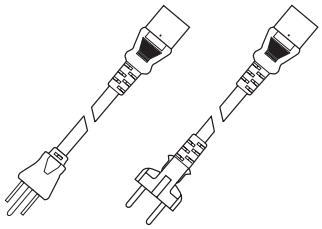

Power cord (two)
(246C483-10, 246C383-20)

■ Remote control parts

Remote control
(290P176-10)

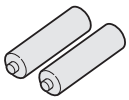

R6 (size-AA)
battery (two)

■ Others

- Lens cap (attached to the projector)
- Terminal cover (750B017-10)
- Lamp replacement tray (857C132-10)
- CD-ROM (919C165-10)
- Safety Manual/Quick Start up (871D531-10)

Important:

- The attached power cords are to be used exclusively for this product. Never use them for other products.

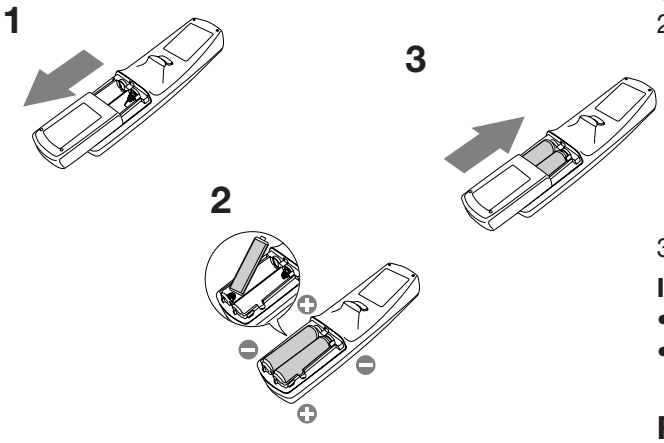

Inserting the batteries into the remote control

1. Remove the rear lid of the remote control.
2. Check the polarity (+), (-) of the batteries, and set them correctly, inserting their (-) side first.
   - If the battery is inserted from the (+) side first, inserting the (-) side is difficult because the coil spring end hits on the battery side. If the battery is forced to insert in this way, the outer label of the battery may get ripped and it may cause a short-circuit and heating.
3. Attach the rear lid.

Important:

- Use two size-AA batteries (R6).
- Replace the 2 batteries with new ones when the remote control is slow to operate.

Removing the batteries from the remote control

Remove the back lid of the remote control and take out the batteries.

Caution:

- Use of a battery of wrong type may cause explosion.
- Only Carbon-Zinc or Alkaline-Manganese Dioxide type batteries should be used.
- Dispose of used batteries according to your local regulations.
- Batteries may explode if misused. Do not recharge, disassemble, or dispose of them in fire.
- Be sure to handle the batteries according to the instructions.
- Load the batteries with its positive (+) and negative (-) sides correctly oriented as indicated on the remote control.
- Keep batteries out of reach of children and pets.
- Remove the batteries, if the remote control is not used for a long time.
- Do not combine a new battery with an old one.
- If the solution of batteries comes in contact with your skin or clothes, rinse with water. If the solution comes in contact with your eyes, rinse them with water and then consult your doctor.

Overview

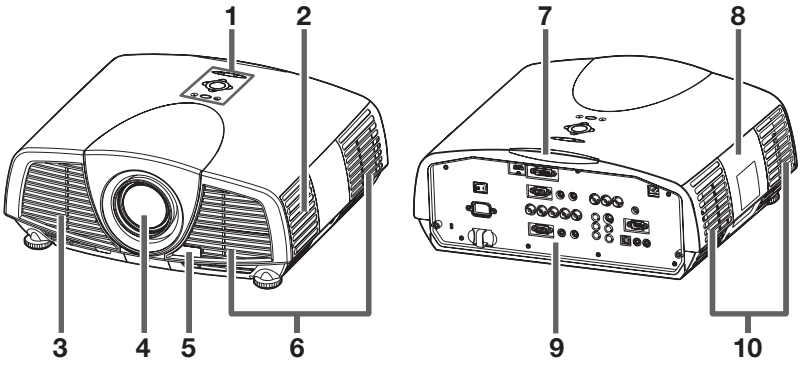

1 Control area
2 Speaker
3 Air outlet grille
4 Lens
5 Remote control sensor (front)
6 Air inlet grille
7 Remote control sensor (rear)
8 Lamp cover
9 Terminal panel
10 Air outlet grille

Caution:
Do not replace the lamp immediately after using the projector because the lamp would be extremely hot and it may cause burns.

Control area

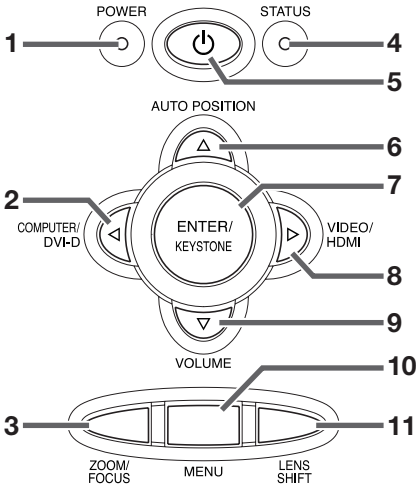

1 POWER indicator
2 COMPUTER/DVI-D/◀ button
3 ZOOM/FOCUS button
4 STATUS indicator
5 POWER button
6 AUTO POSITION/▲ button
7 ENTER/KEYSTONE button
8 VIDEO/HDMI/▶ button
9 VOLUME/▼ button
10 MENU button
11 LENS SHIFT button

Terminal panel

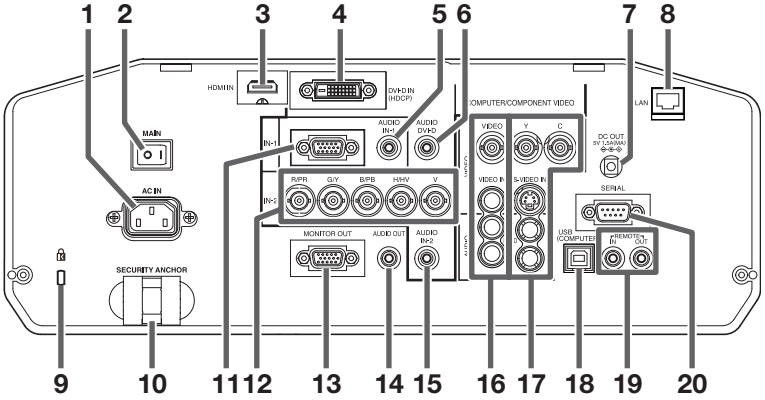

1 Power jack
2 Main power switch
O: OFF I: ON
3 HDMI IN terminal (HDMI 19-pin)
4 COMPUTER/COMPONENT VIDEO DVI-D IN (HDCP) terminal (DVI-D 24-pin)
5 AUDIO IN-1 terminal (mini jack)
6 AUDIO DVI-D terminal (mini jack)
7 DC OUT terminal (5V 1.5A MAX)
8 LAN terminal

9 Kensington Security Lock Standard connector
10 Lock bar (SECURITY ANCHOR)
- Attach a chain, etc. to this lock bar to anchor the projector.

11 COMPUTER/COMPONENT VIDEO IN-1 terminal (mini D-SUB 15-pin)
12 COMPUTER/COMPONENT VIDEO IN-2 terminals (R/P_R, G/Y, B/P_B, H/HV, V) (BNC)
13 MONITOR OUT terminal (mini D-SUB 15-pin)
14 AUDIO OUT terminal (mini jack)
15 AUDIO IN-2 terminal (mini jack)
16 VIDEO IN and audio input terminals
17 S-VIDEO IN and audio input terminals
18 USB (COMPUTER) terminal
19 REMOTE IN and OUT terminals
20 SERIAL terminal (D-SUB 9-pin)

Bottom side

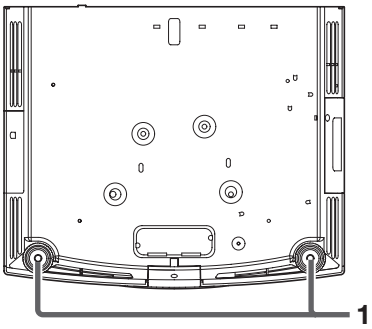

1 **Adjustment feet**

Remote control

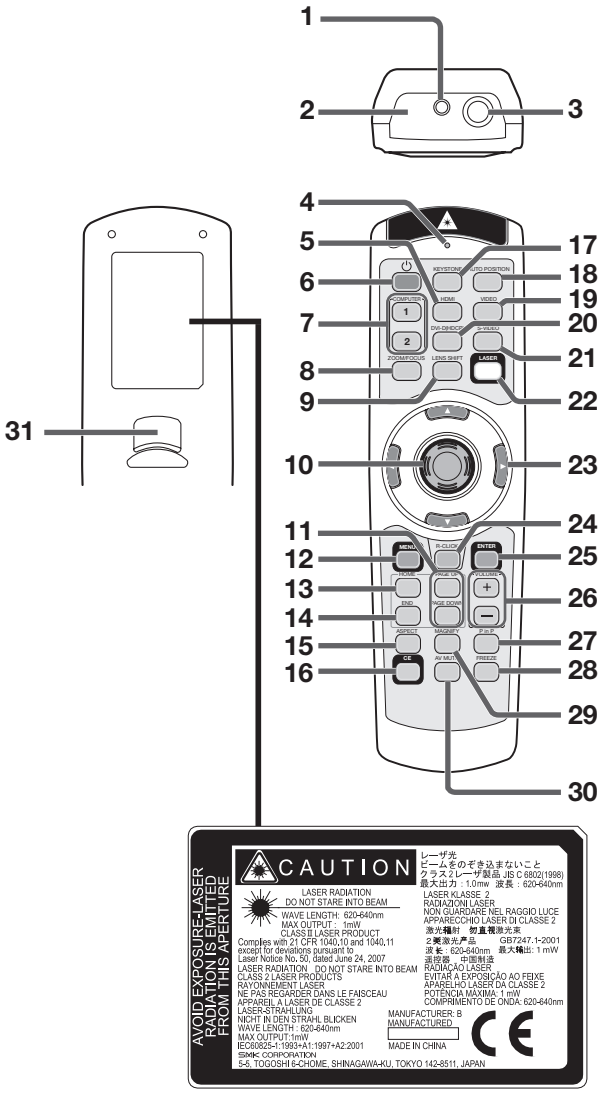

1 **Laser aperture**
2 **Transmission window**
3 **Wired remote control jack**
4 **Indicator**
5 **HDMI button**
6 **POWER button**
7 **COMPUTER 1, 2 buttons**
8 **ZOOM/FOCUS button**
9 **LENS SHIFT button**
10 **Mouse pointer**
11 **PAGE UP and PAGE DOWN buttons**
12 **MENU button**
13 **HOME button**
14 **END button**
15 **ASPECT button**
16 **CE (Color Enhancer) button**
17 **KEYSTONE button**
18 **AUTO POSITION button**
19 **VIDEO button**
20 **DVI-D(HDCP) button**
21 **S-VIDEO button**
22 **LASER button**
23 **▲, ▼, ◀, ▶ buttons**
24 **R-CLICK button**
25 **ENTER button**
26 **+ , - (VOLUME) buttons**
27 **PinP button**
28 **FREEZE button**
29 **MAGNIFY button**
30 **AV MUTE button**
31 **Left click button**

- Pressing the LASER button emits a laser beam. Even when you keep holding down the LASER button, it is emitted only one minute. To keep emitting it longer, press the LASER button again.
- You can disable the LASER button to prevent laser radiation due to misuse of the button.
  How to disable the LASER button
  While holding the LASER button down, press the ▼ button 3 times.
  How to enable the LASER button
  While holding the LASER button down, press the ▲ button 3 times.
  - Whenever the batteries are replaced, the LASER button is enabled.

About the laser beam

This remote control is a Class 2 laser product. (Max. output: 1 mW, Wavelength: 620-640 nm)
Beam Divergence: 6 m distance about 10.0 mm x 10.0 mm (±6.0 mm)

Caution:

- Pressing the LASER button on the remote control emits a laser beam. Do not look into the laser beam directly. Do not point the laser beam at anyone. Looking at the laser beam directly may damage eyesight.
- Use of controls or adjustments or procedures other than those specified herein may result in hazardous radiation exposure.
- This remote controller cannot be repaired.

Using the remote control

Operational range of the remote control

Front of projector

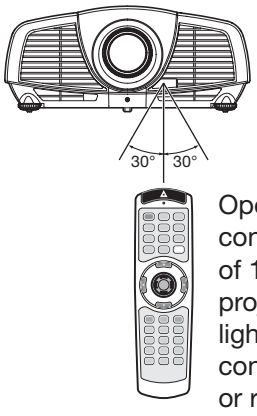

Rear of projector

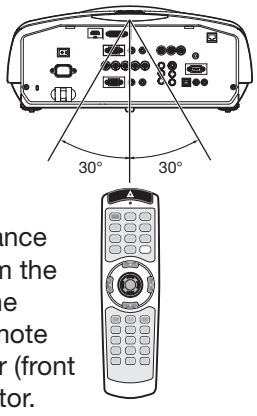

Operate the remote control within a distance of 10 m (30 feet) from the projector, pointing the light beam at the remote control photo-sensor (front or rear) of the projector.

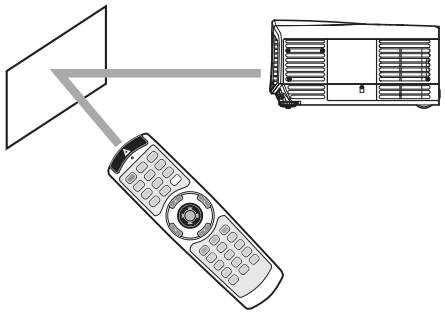

- Keep the remote control photo-sensor out of direct sunlight or fluorescent lamp light.
- Keep the remote control photo-sensor at least 2 m (6 feet) away from fluorescent lamps. Otherwise, the remote control may malfunction.
- If there is an inverter-operated fluorescent lamp near the remote control, the remote control operation may become unstable.
- When you use the remote control too close to the remote control sensor, the remote control may not work correctly.

When operating the remote control, keep the distance from the remote control to the projector via the screen within about 5 m (15 feet). The operable range of the remote control, however, depends on the characteristics of the screen.

Reception angle

Vertical directions

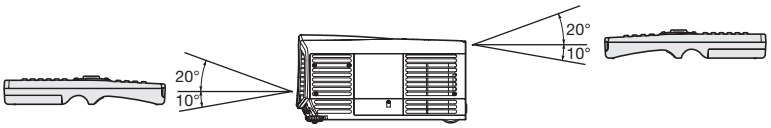

Vertical directions (ceiling mount)

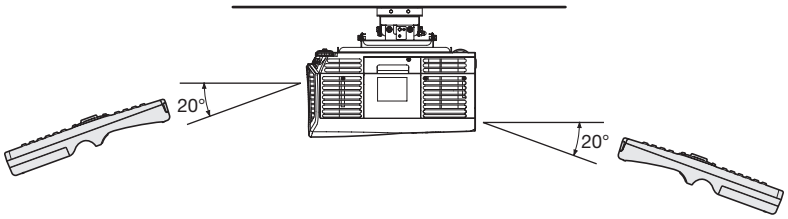

Using the wired remote control

Attached remote control for this projector can be used as a wired remote control with remote control cable. Wired remote control is useful for operating in a distance or outside of the operating area.

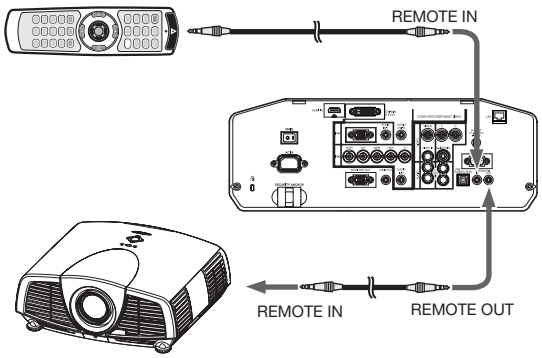

- For connection, use the pin-pin cable of ø3.5 stereo type, which is commercially available. However, some cable may not work correctly.
- When REMOTE OUT terminal on this projector is connected to the REMOTE IN terminal on the other projector, the two projectors can be controlled together by using the remote control.
- When the remote control is connected with remote control cable, it does not work as a wireless remote control.
- When using the wired remote control, the laser beam may be darker. It is normal.

Setting up your projector

Setting up the screen

Install the screen perpendicularly to the projector. If the screen can not be installed in such a way, adjust the projection angle of the projector. (See page 11.)

- Install the screen and projector so that the projector's lens is placed at the same height and horizontal position of the screen center.
- Do not install the screen where it is exposed to direct sunlight or lighting. Light directly reflecting on the screen makes the projected images whitish and hard to view.

Screen size and projection distance

Refer to the following table to determine the screen size and projection distance.

Front projection

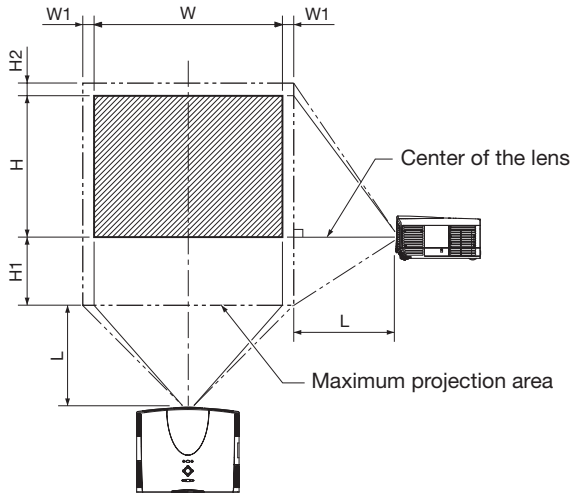

Front projection, ceiling mounting

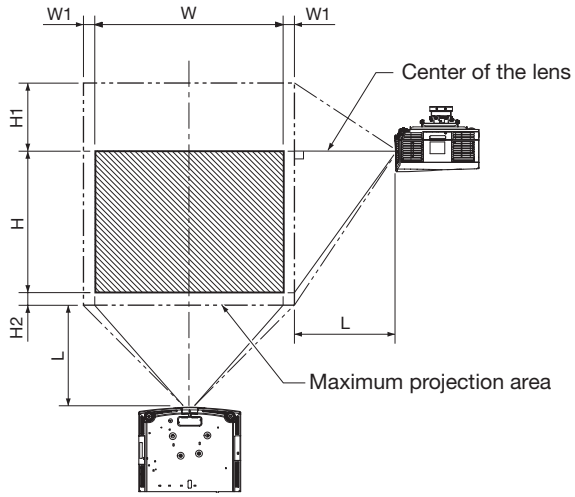

Screen size						Projection distance (L)				Lens shift height				Lens shift width (W1)	
Diagonal size		Width (W)		Height (H)		Shortest (Wide)		Longest (Tele)		H1		H2			
inch	cm	inch	cm	inch	cm	inch	m	inch	m	inch	cm	inch	cm	inch	cm
40	102	32	81	24	61	54	1.4	74	1.9	12	30	2	6	3	8
60	152	48	122	36	91	82	2.1	112	2.8	18	46	3	9	5	12
80	203	64	163	48	122	110	2.8	150	3.8	24	61	4	11	6	16
100	254	80	203	60	152	138	3.5	189	4.8	30	76	6	14	8	20
150	381	120	305	90	229	208	5.3	284	7.2	45	114	8	21	12	30
200	508	160	406	120	305	279	7.1	380	9.7	60	152	11	28	16	41
250	635	200	508	150	381	349	8.9	476	12.1	75	191	14	36	20	51
300	762	240	610	180	457	419	10.6	571	14.5	90	229	17	43	24	61

- The above figures are approximate and may be slightly different from the actual measurements.
- The lens shift height and width show distances from the factory default position.

- Depending on the installation conditions, warm air that is emitted from the exhaust vents may flow into the intake vent, causing the projector to display "TEMPERATURE!!" and then stop projecting images.

Adjusting the position of the projected image

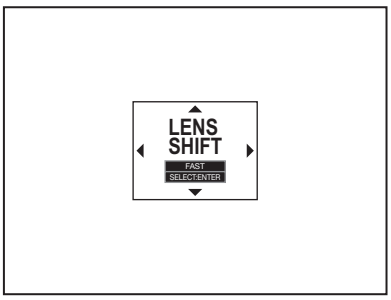

To adjust the positions of the projector and the screen, use LENS SHIFT button.

1. Press the LENS SHIFT button.
   - The LENS SHIFT menu appears at the center of the screen.
2. Press the ▲, ▼, ◀ or ▶ button to move the image position.
   - When the ▼ button is pressed, the image moves down.
   - When the ▲ button is pressed, the image moves up.
   - When the ▶ button is pressed, the image moves to the right.
   - When the ◀ button is pressed, the image moves to the left.

- When the ENTER button is pressed while the LENS SHIFT menu is displayed, the shift mode can be switched between FAST and STEP. When FAST is selected, the lens shifts in a large amount with the ▲, ▼, ◀ or ▶ button, and it shifts in a small amount when STEP is selected.
- When the LENS SHIFT menu is displayed while no video signal is input to the projector, a crosshatch appears on the entire screen.
- Be careful not to be caught in the opening in the lens while the lens is moving.
- While the lens shift is working, the screen may flicker.

Correcting skewed or distorted image

For the best projection, project images on a flat screen installed at 90 degrees to the floor. If necessary, tilt the projector using the two adjustment feet on the bottom of the projector.

1. Tilt up the projector to the appropriate angle.
2. Rotate the adjustment feet for fine adjustment.

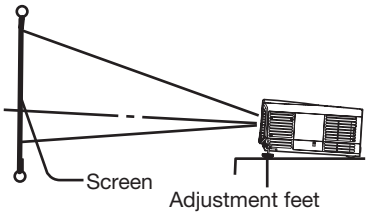

Important:

- Don't transport the projector with its adjustment feet extended. Otherwise the adjustment feet may be damaged.

When fine streaks are seen on projected images

This is due to interference with the screen surface and is not a malfunction. Replace the screen or displace the focus a little. (See page 16 or 22 for focus adjustment.)

When projected images are distorted to a trapezoid

When the screen and the projector are not placed perpendicularly to each other, projected images become trapezoidal. If you cannot make the projector and the screen perpendicular to each other by mechanical adjustments, adjust keystone.

To adjust keystone:

Press the KEYSTONE button on the projector or the remote control to display KEYSTONE, and adjust the image by pressing the ▶, ◀, ▲ or ▼ button (or VOLUME + or - button on the remote control).

In the following cases (for front projection):

Press the ▶ button. | Press the ◀ button. | Press the ▼ (or -) button. | Press the ▲ (or +) button.

Important:

- For proper keystone adjustment results, reset the lens to the factory-adjusted position using LENS SHIFT RESET in the INSTALLATION menu before carrying out keystone adjustment. (See page 30.)
- When the keystone adjustment is carried out, the adjustment value is indicated. Note that this value doesn't mean a projection angle.
- The allowable range of the adjustment value in the keystone adjustment varies depending on the installation conditions.
- When the keystone adjustment takes effect, the resolution decreases. In addition, stripes may appear or straight lines may bend in images with complicated patterns. They are not due to product malfunctions.
- When the keystone adjustment is performed, the displayed image may be distorted.
- Depending on the installation conditions of the projector and the screen, a perfect rectangular image and the proper aspect ratio may not be obtained.
- Noise may appear on the screen during the keystone adjustment because of the type of the video signal being projected and the setting values of the keystone adjustment. In such cases, set the keystone adjustment values in the range where the image is displayed without noise.
- When horizontal and vertical keystone adjustments are performed in combination, the adjustable range becomes narrower than in the case when they are performed separately.
- In the keystone adjustment with the option lens, the proper aspect ratio may not be obtained.

Front projection, ceiling mounting

For ceiling mounting, you need the ceiling mount kit designed for this projector. Ask a specialist for installation. For details, consult your dealer.

- The warranty on this projector does not cover any damage caused by use of any non-recommended ceiling mount kit or installation of the ceiling mount kit in an improper location.

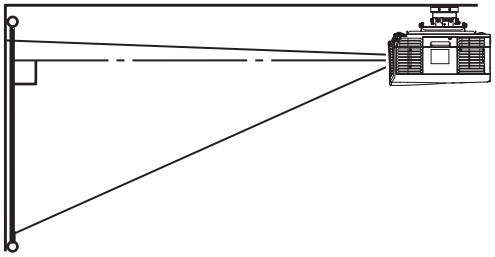

- When using the projector mounted on the ceiling, set IMAGE REVERSE in the INSTALLATION menu to MIRROR INVERT. See page 30.
- When the projector is mounted on the ceiling, images may appear darker than those projected in the case of tabletop mounting. This isn't a product malfunction.
- Ask your installation specialist to provide a breaker. When you do not use the projector, be sure to shut down the main power by the breaker.
- Do not install the projector where the exhaust vents are exposed to air emitted by an air conditioning. Such installation may cause a breakdown.
- Do not install the projector near a fire alarm because it emits hot air from its exhaust vents.

Rear projection

Ask a specialist for installation. For details, consult your dealer.

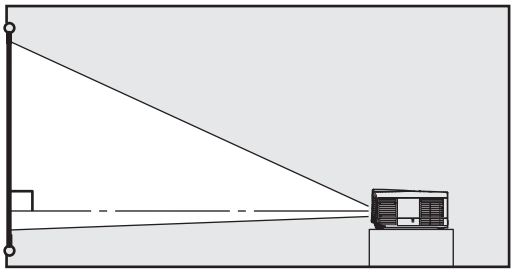

- For rear projection, set IMAGE REVERSE in the INSTALLATION menu to MIRROR. See page 30.

Caution:

- Placing the projector directly on a carpet impairs ventilation by the fans, causing damage or failure. Put a hard board under the projector to facilitate ventilation.
- Place the projector at least 50 cm (or 20 inches) away from the wall to prevent the air inlet grille and the air outlet grilles that emit hot air from being blocked.
- Do not use the projector in the following locations and manners, which may cause fire or electric shock.
  - In a dusty or humid place.
  - In a sideways position, or with the lens facing down.
  - Near a heater.
  - In an oily, smoky, or damp place such as a kitchen.
  - In direct sunlight.
  - Where the temperature rises high, such as in a closed car.
  - Where the temperature is lower than +41°F (or +5°C) or higher than +95°F (or +35°C).

Important:

- We don't recommend using the projector at an altitude of 1500 meters or higher. Use at an altitude of 1500 meters or higher may affect the projector's life.

Viewing computer images

A. Connecting the projector to a computer

Preparation:

- Make sure that the power of the projector and that of the computer are turned off.
- When connecting the projector to a desktop computer, disconnect the RGB cable that is connected to the monitor.

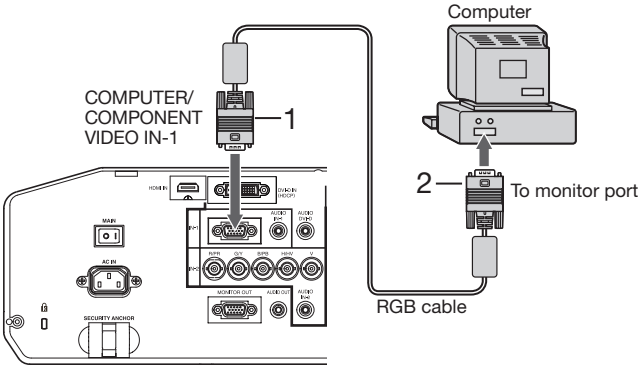

For analog connection:
(For using the COMPUTER/COMPONENT VIDEO IN-1 terminal.)

1. Connect one end of the supplied RGB cable to the COMPUTER/COMPONENT VIDEO IN-1 terminal of the projector.
2. Connect the other end of the RGB cable to the monitor port of the computer.

- When viewing images supplied from an analog-connected computer, press the COMPUTER 1 button on the remote control.

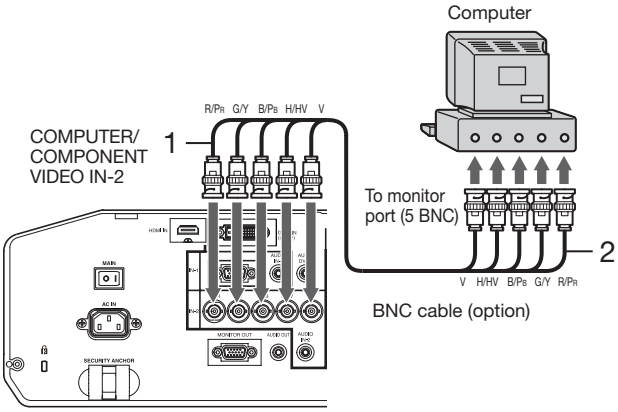

For analog connection:
(For using the COMPUTER/COMPONENT VIDEO IN-2 terminal.)

1. Connect one end of a commercially available BNC cable to the COMPUTER/COMPONENT VIDEO IN-2 terminal of the projector.
2. Connect the other end of the BNC cable to the 5 BNC terminals of the monitor port of the computer.

- When viewing images supplied from an analog-connected computer, press the COMPUTER 2 button on the remote control.

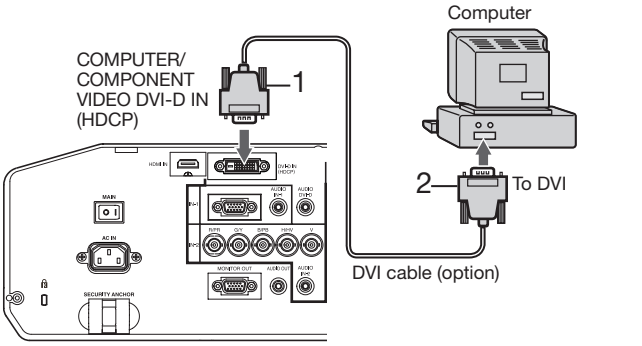

For digital connection:

1. Connect one end of a commercially available DVI cable to the COMPUTER/COMPONENT VIDEO DVI-D IN (HDCP) terminal of the projector.
2. Connect the other end of the DVI cable to the DVI terminal of the computer.

- When viewing images supplied from a digital-connected computer, press the DVI-D(HDCP) button on the remote control.
- Turn on the main power switch of the projector before starting the computer.

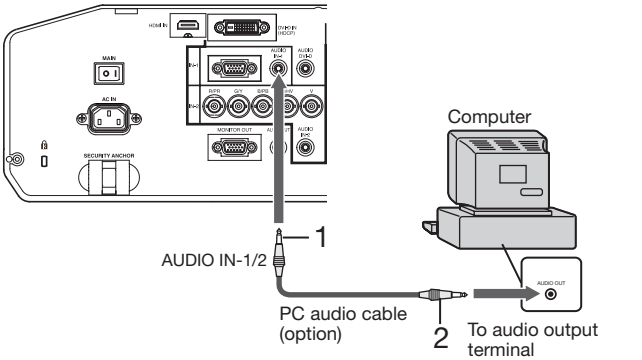

For audio connection:

1. Connect one end of a commercially available PC audio cable to the AUDIO IN-1/2 terminal of the projector.
2. Connect the other end of the PC audio cable to the audio output terminal of the computer.

- This projector uses stereo pin jack for its audio input. Check the type of the audio output terminal of the connected computer and prepare a proper cable for connection. Some computers don't have the audio output terminal.
- Speaker output is mono.
- No audio is output from the projector's speaker and the AUDIO OUT terminal during power standby.

- Additional devices, such as a conversion connector and an analog RGB output adapter, are required depending on the type of the computer to be connected.
- Use of a long cable may decrease the quality of projected images.
- Images may not be projected correctly, depending on the type of the connected computer.
- When DVI-D signal is input, some signal setting menus are unavailable.
- Also read the instruction manual of the equipment to be connected.
- Contact your dealer for details of connection.

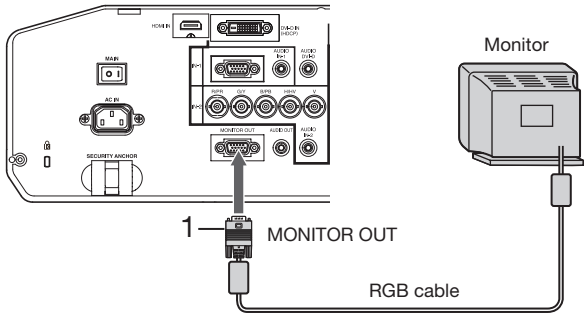

For monitor connection:

1. Connect the RGB cable from the monitor to the MONITOR OUT terminal of the projector.
- No video signal is output from the MONITOR OUT terminal during power standby.

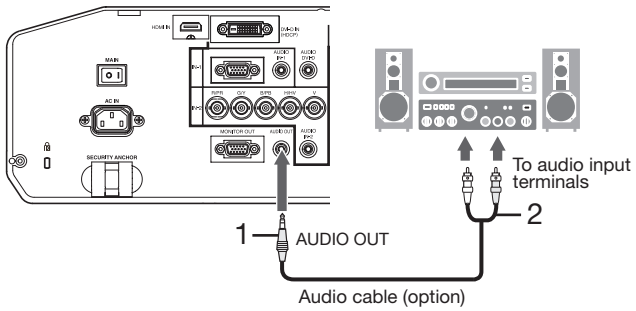

For audio output connection:

1. Connect one end of a commercially available audio cable to the AUDIO OUT terminal of the projector.
2. Connect the other end (white and red) of the audio cable to the audio input terminals (L, R) of the audio equipment.
- When the audio cable is connected to the AUDIO OUT terminal, the speaker output is muted.

About DDC

The COMPUTER/COMPONENT VIDEO IN-1 terminal of this projector complies with the DDC1/2B standard and the COMPUTER/COMPONENT VIDEO DVI-D IN (HDCP) terminal complies with the DDC2B standard. When a computer supporting this standard is connected to this terminal, the computer will automatically load the information from this projector and prepare for output of appropriate images.

- When connecting a DDC-supporting computer to the projector, turn on the main power switch of the projector before starting the computer.

B. Plugging the power cord

- In order to ensure the safety in case of trouble with the projector, use an electrical outlet having an earth leakage breaker to supply the power to the projector. If you do not have such outlet, ask your dealer to install it.

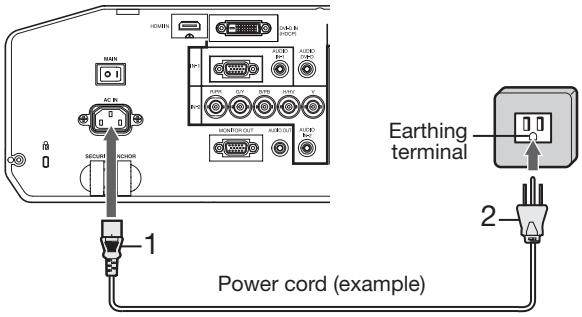

1. Plug the attached power cord into the power cord inlet of this projector.
2. Plug the other end of the power cord into a power outlet.

- The power cords for use in the U.S. and Europe are included with this projector. Use the appropriate one for your country.
- This projector uses the power plug of 3-pin grounding type. Do not take away the grounding pin from the power plug. If the power plug doesn't fit your wall outlet, ask an electrician to change the wall outlet.
- The provided power cord for the U.S. is rated at 120 V. Never connect this cord to any outlet or power supply using other voltages or frequencies than rated. If you use a power supply using other voltage than rated, prepare an appropriate power cord separately.
- Use 100-240 V AC 50/60 Hz to prevent fire or electric shock.
- Do not place any objects on the power cord or do not place the projector near heat sources to prevent damage to the power cord. If the power cord should be damaged, contact your dealer for replacement because it may cause fire or electric shock.
- Do not modify or alter the power cord. If the power cord is modified or altered, it may cause fire or electric shock.

Caution:

- Plug in the power cord firmly. When unplugging, hold and pull the power plug, not the power cord.
- Do not plug in or out the power cord with your hand wet. It may cause electric shock.

C. Installing the terminal cover

This projector includes a terminal cover. If necessary, install the terminal cover to the projector.

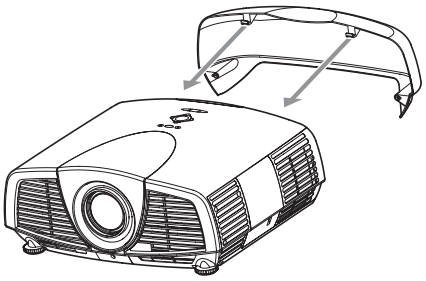

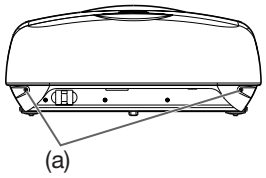

1. Fit two hooks of the terminal cover into the projector.
2. Tighten the attachment screws (a) firmly.

Important:

- Don’t carry the projector by the terminal cover.

D. Projecting images

Preparation:

- Remove the lens cap.

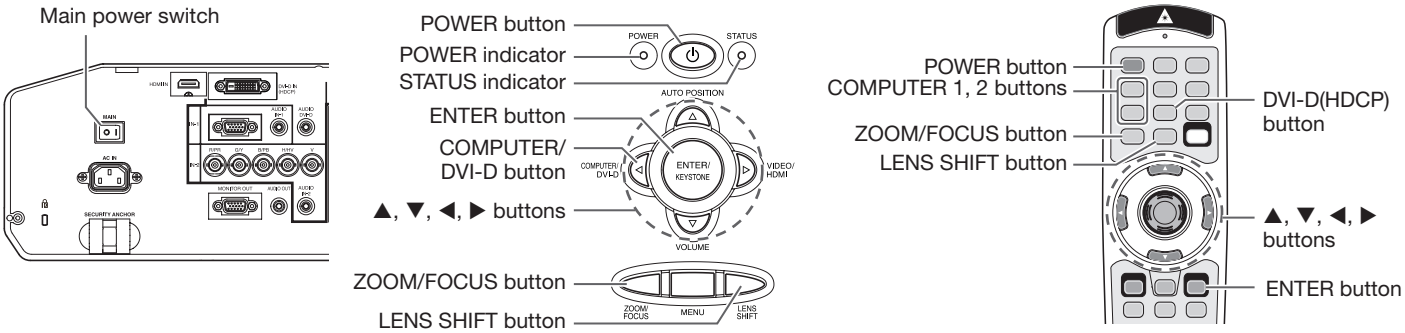

1. Put the projector into standby mode by pressing the main power switch. The POWER indicator lights up red.
   - If the projector was turned off before the lamp was cooled down sufficiently last time, the fan may start rotating and the POWER button may not work after the main power switch is turned ON. (The STATUS indicator blinks green.) After the fan stops rotating, press the POWER button to turn back on the POWER indicator.
2. Turn on the power of the connected computer.
3. Press the POWER button.
   - It may take about 1 minute for the lamp to light up.
   - The lamp fails to light up on rare occasions. In such a case, wait for a few minutes and then try again.
   - Do not cover the lens with the lens cap while the lamp is on. Do not strip off the aluminium sheet inside the lens cap.
   - After the POWER button is pressed, the image may flicker before the lamp becomes stable. This is not a product malfunction.
   - The lamp operation becomes stable in 1 minute after the power is turned on and then the lamp mode selected in the menu is activated. During the activation, displayed images may be disturbed.
   - The projector starts warming up when the POWER button is pressed. During the warm-up process, images may appear dark and no commands are accepted.
   - By blinking red, the STATUS indicator indicates that the lamp should be replaced soon. Replace the lamp when the STATUS indicator blinks red. (See page 42.)
4. Press the ZOOM/FOCUS button to display the ZOOM/FOCUS menu.
5. Adjust with the ◀ or ▶ button to get a fine picture.
   - When the ENTER button is pressed while the ZOOM/FOCUS menu is displayed, the adjustment mode is switched between FAST and STEP. When FAST is selected, the speed of focus controlled by the ◀ or ▶ button becomes fast, and it becomes slow when STEP is selected.
6. Select an input source.
   - Press the COMPUTER/DVI-D button on the projector or the COMPUTER 1, COMPUTER 2 or DVI-D(HDCP) button on the remote control that is corresponding to the terminal in use.
   - The input source is switched from COMPUTER 1 to COMPUTER 2 to DVI at every press of the COMPUTER/DVI-D button on the projector.
   - The projector automatically selects the appropriate signal format. The selected signal format is displayed on the screen.
   - You cannot change the input source while the menu is being displayed.
   - Though it may take some time before an image is displayed on the screen depending on the type of the input signal, such symptom is not a malfunction.
   - Images may not be projected in the correct position, depending on the type of the input signal. In such a case, press the AUTO POSITION button. (See page 18.)
   - When COMPUTER 1 or COMPUTER 2 is chosen as the source, images supplied from the computer may flicker. Press the ◀ or ▶ button on the remote control to reduce flicker, if it occurs. (Fine adjustment)
7. Adjust the position of the projector to keep an appropriate projection distance with which images are projected in their specified sizes.
8. Adjust the position of the projector so that the projector and the screen are perpendicular to each other. (See page 10.)
   - When the projector cannot be positioned perpendicularly to the screen, adjust the projection angle. (See page 11.)

9. Press the ZOOM/FOCUS button to display the ZOOM/FOCUS menu.
10. Adjust with the ▲ or ▼ button to get an approximate size.
    - When the ENTER button is pressed while the ZOOM/FOCUS menu is displayed, the adjustment mode is switched between FAST and STEP. When FAST is selected, the speed of zoom controlled by the ▲ or ▼ button becomes fast, and it becomes slow when STEP is selected.
11. Press the LENS SHIFT button. The LENS SHIFT menu appears at the center of the screen.
12. Press the ▲ or ▼ button to adjust the vertical position and ◀ or ▶ button to adjust the horizontal position of the displayed image.
    - When the image is not displayed within the screen, adjust the projection angle. In addition, perform the keystone adjustment, if necessary. (See page 11.)

Repeat steps 4, 5 and 9 to 12, if necessary.

Important:
- Focus, zoom and lens shift adjustment is possible in the normal picture mode only.
- When a 16:9 image is kept displayed for a long time before displaying 4:3 image, the afterimages of the black bars may appear on the 4:3 image screen. Consult your dealer in this case.

To stop projecting:

13. Press the POWER button.
    - A confirmation message is displayed.
    - To cancel the procedure, leave the projector for a while or press any button except the POWER button.
14. Press the POWER button again.
    - The lamp goes out and the projector goes into a standby mode. In this standby mode, the STATUS indicator blinks green.
15. Wait about 2 minutes for the STATUS indicator to be turned off.
    - During this period of 2 minutes in the standby mode, the intake fan and exhaust fan rotate to cool the lamp.
    - The air outlet fans rotate faster as the temperature around the projector rises.
    - Though the fans make loud sounds during cooling, such symptom is not a malfunction.
16. Turn off the main power switch.
    - The POWER indicator will go out.
    - If the main power switch should be turned off or the power cord should be unplugged accidentally while either the air inlet fan or the air outlet fans are operating or the lamp is on, allow the projector to cool down for 10 minutes with the power off. To light the lamp again, press the POWER button. If the lamp doesn't light up immediately, repeat pressing the POWER button 2 or 3 times. If it should still fail to light up, replace the lamp.
    - Cover the lens with the lens cap to protect it from dust.
    - For safety's sake, unplug the power cord from the outlet.
    - When you repeat turning off the main switch within 30 minutes from the lamp illumination, an error may occur in the clock function of this product.

Instant Shut Down

You can turn off this projector just by turning off the power switch or unplugging the power cord without pressing the POWER button.
- Don't shut down the projector while the STATUS indicator is blinking after the lamp lights up because the lamp's life may be shortened.
- Don't turn the projector back on right after shutting it down because the lamp's life may be shortened. (Wait about 10 minutes before turning the projector back on.)
- Before shutting down the projector, be sure to close the menu screen. If you shut down the projector without closing the menu, the setting data of the menu may not be saved.
- If you shut down the projector while controlling the projector using the network function, the application software such as ProjectorView may fail. For details, see "User Guide of LAN Control Utility" contained in the CD-ROM.

AV mute

The video and audio signals are temporarily muted when the AV MUTE button is pressed. To cancel muting, press the AV MUTE button again.

- It takes several seconds before muting is completely canceled.
- If AV MUTE MODE in the INSTALLATION menu is set to IMAGE, the splash screen will appear when the AV MUTE button is pressed.
- You can alter the splash screen optionally. See page 37.
- The audio from the AUDIO OUT terminal is also muted by pressing the AV MUTE button.

AUTO POSITION button

When the image supplied from the computer is displaced, carry out the following procedure.

1. Project a bright image containing as many texts and characters as possible.
2. When the screen saver has been enabled, disable it.
3. Press the AUTO POSITION button.
   The projector automatically makes optimum positional settings for the input signal.

- If the projected image is still displaced even after pressing the AUTO POSITION button several times, refer to the procedure to adjust computer images. (See pages 35 and 36.)
- When you carry out this procedure with a dark image, the image may be displaced.

When connecting to a notebook computer:

When the projector is connected to a notebook computer, images may not be projected in some cases. In such cases, set the computer so that it can output signals externally. The setting procedure varies depending on the type of the computer. See the instruction manual of your computer.

Example of the setting procedure for external output

Press the [Fn] key and any of the keys [F1] to [F12] at the same time. (The key to be pressed depends on the type of the computer you use.)

Setting of the resolution

If the resolution of the computer doesn’t match with that of the projector, projected images may be obscured. Ensure that their resolutions are the same (see page 51). For the method to change the output resolution of the computer, contact the manufacturer of the computer.

Viewing video images

A. Connecting the projector to video equipment

Preparation:

- Make sure that the power of the projector and that of the video equipment are turned off.

Connecting to a video player, etc.

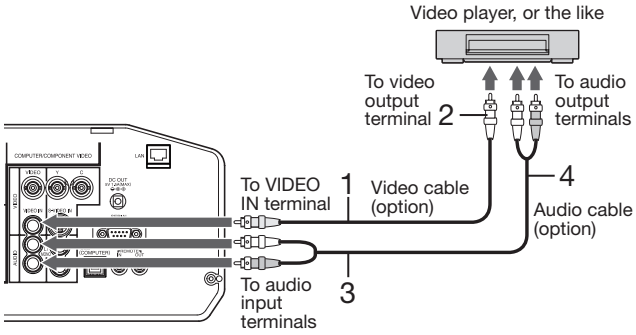

1. Connect one end of a commercially available video cable to the VIDEO IN terminal of the projector.
2. Connect the other end of the video cable to the video output terminal of the video equipment.
3. Connect one end of a commercially available audio cable to the audio input terminals (L/MONO, R) of the projector.
4. Connect the other end of the audio cable to the audio output terminals (L, R) of the video equipment.

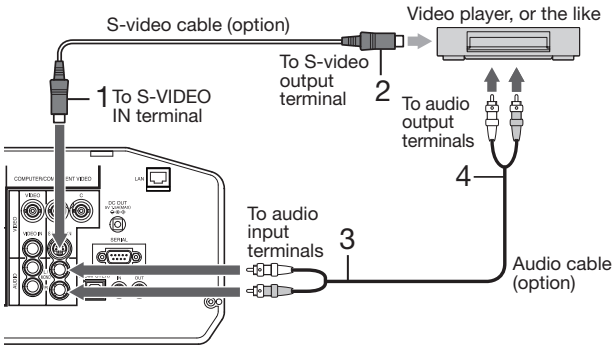

When the video equipment is equipped with the S-video output terminal, make the connection as follows:

1. Connect one end of a commercially available S-video cable to the S-VIDEO IN terminal of the projector.
2. Connect the other end of the S-video cable to the S-video output terminal of the video equipment.
3. Connect one end of a commercially available audio cable to the audio input terminals (L/MONO, R) of the projector.
4. Connect the other end of the audio cable to the audio output terminals (L, R) of the video equipment.

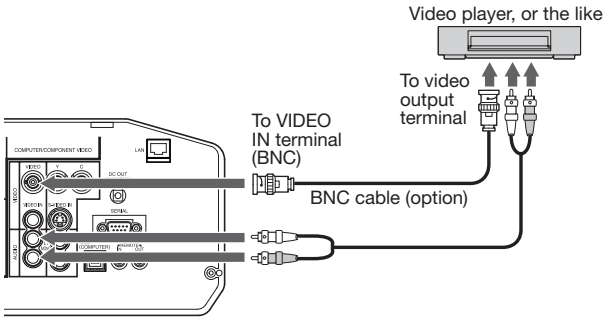

When using the BNC connector:
(For VIDEO input)

- When the video output terminal of the connected video equipment is BNC type, use the VIDEO IN terminal (BNC type).
- Select VIDEO as the input source.
- When using the VIDEO IN terminal (BNC type) and the VIDEO IN terminal (RCA type) at the same time, the video signal input to the VIDEO IN terminal (RCA type) takes priority.

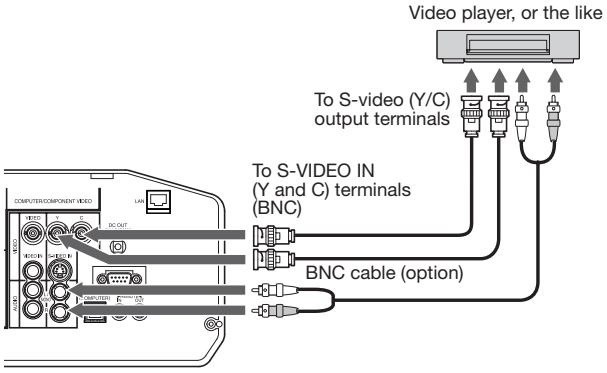

When using the BNC connector:
(For S-VIDEO input)

- When the video output terminals of the connected video equipment are BNC (Y/C) type, connect Y and C to the S-VIDEO IN (Y and C) terminals (BNC type) respectively.
- Select S-VIDEO as the input source.
- When using the S-VIDEO IN (Y and C) terminals (BNC type) and the S-VIDEO IN terminal (S type) at the same time, the video signal input to the S-VIDEO IN terminal (S type) takes priority.

- When connecting a monophonic video device, use the white (L) terminal to connect the audio cable. (The same audio signal is output from the channels L and R of the AUDIO OUT terminal.)
- Also read the instruction manual of the equipment to be connected.
- Contact your dealer for details of connection.

When a TV tuner or VCR is connected:
When you use this projector with a TV tuner or VCR connected, no image may appear or a message of “NO SIGNAL” may appear on the screen when you change the channel via any channel that is not being received. In such a case, set the channels of the TV tuner or VCR again. To avoid such symptom, use the TV tuner or VCR with its channel skip function (that is a function not to display channels that are not being received) enabled.

Projector + DVD player or HDTV decoder

Some DVD players have an output connector for 3-line fitting (Y, C_B, C_R). When connecting such DVD player with this projector, use the COMPUTER/COMPONENT VIDEO IN-2 terminals.

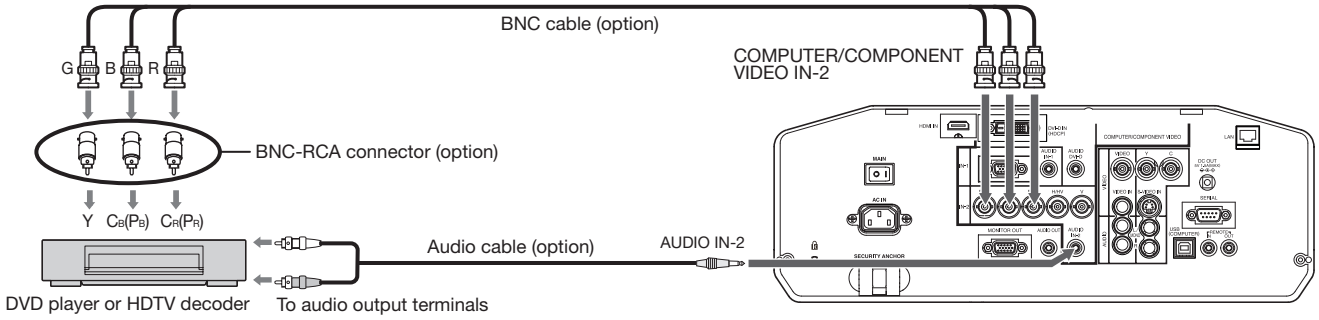

- The terminal's names Y, P_B, and P_R are given as examples of when a HDTV decoder is connected.
- The terminal's names vary depending on the connected devices.
- Use BNC cables for connection.
- Image may not be projected correctly with some DVD players.
- If colors aren't displayed correctly when the projector is connected to a high-definition video device having R, G, and B output terminals, set COMPUTER INPUT to RGB in the SIGNAL menu. (See page 32.)

Connecting to video equipment having a HDMI terminal or DVI-D terminal

You can project high-quality images by connecting the COMPUTER/COMPONENT VIDEO DVI-D IN (HDCP) terminal of this projector to video equipment having a HDMI output terminal or DVI-D terminal. In addition, this projector supports HDCP and is able to receive encrypted digital video data that are output from DVD players.

- HDCP (High-bandwidth Digital Content Protection), developed by Intel Corporation, is a method to encrypt digital video data for the purpose of copy protection.
- HDMI (High-Definition Multimedia Interface) is fully backward compatible with computers, displays and consumer electronics devices incorporating the DVI standards.
- This projector can be linked with video devices equipped with HDMI output terminal or DVI-D output terminal. However, with some of them, this projector may not display any image or not operate correctly.
- If this projector doesn't display any image or not operate correctly, see the operation manual of the video device for its connection.
- Use of a long cable may decrease the quality of projected images.

Connection (for video equipment having an HDMI terminal)

- Use a commercially available HDMI (with HDMI logo) cable.
- You don't have to connect any cable for audio input. You can input video and audio using an HDMI cable only.
- When HDMI audio isn't output, it may be output by turning off the power of the video equipment with the projector and the video equipment connected to each other and then turning back on the power.
- Some cables may not be connected correctly depending on the size and shape of their connectors.

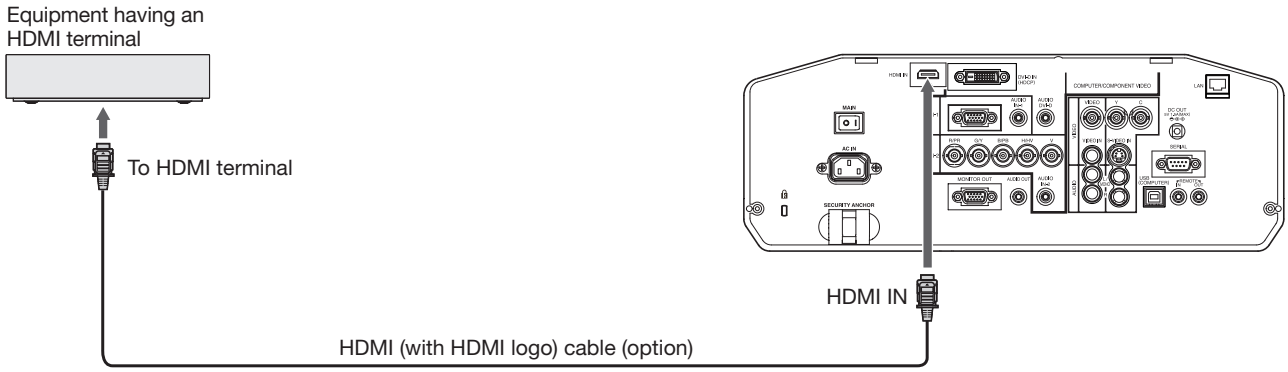

Connection (for video equipment having a DVI-D terminal)

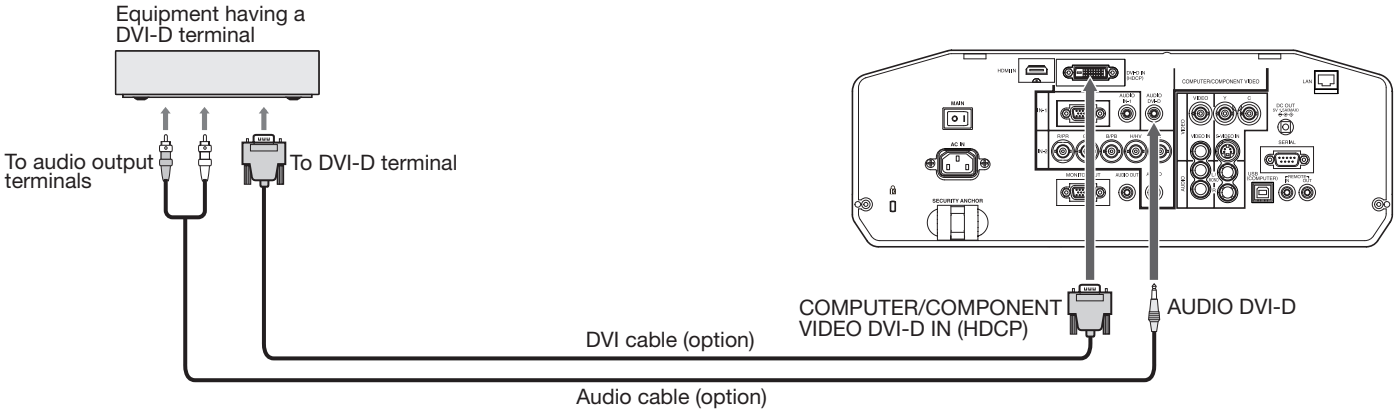

- For connection to the DVI-D terminal, use a commercially available DVI cable.
- Use AUDIO DVI-D terminal for audio input.
- Some cables may not be connected correctly depending on the size and shape of their connectors.
- When DVI is selected as the input source, settings of FINE SYNC., TRACKING, HOLD, etc. are unavailable.

When you connect this projector and a digital device (such as a DVD player) via the HDMI IN or COMPUTER/ COMPONENT VIDEO DVI-D IN (HDCP) terminal, black color may appear dark and deep, depending on the type of the connected device.

- This depends on the black level setting of the connected device. There are 2 kinds of methods to digitally transfer image data, in which different black level settings are employed respectively. Therefore, the specifications of the signals output from DVD players differ, depending on the type of the digital data transfer method they use.
- Some DVD players are provided with a function to switch the methods to output digital signals. When your DVD player is provided with such function, set it as follows.
  EXPAND or ENHANCED → NORMAL
  - See the users guide of your DVD player for details.
  - When your digital device does not have such function, set INPUT LEVEL to ENHANCED in the ADVANCED MENU of the IMAGE menu of this projector, or adjust the black color by viewing the image.

B. Plugging in the power cord

Plug the power cord in the same way as in the case of “Viewing computer images.” (See page 14.)

C. Installing the terminal cover

If necessary, install the terminal cover to the projector in the same way as in the case of “Viewing computer images.” (See page 15.)

D. Projecting images

Preparation:

- Remove the lens cap.

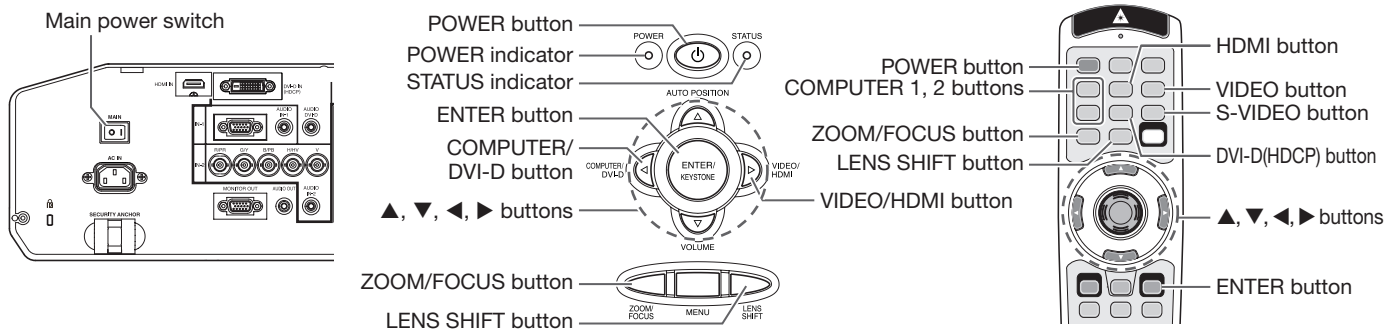

1. Put the projector into standby mode by pressing the main power switch. The POWER indicator lights up red.
   - If the projector was turned off before the lamp was cooled down sufficiently last time, the fan may start rotating and the POWER button may not work after the main power switch is turned ON. (The STATUS indicator blinks green.) After the fan stops rotating, press the POWER button to turn back on the POWER indicator.
2. Turn on the power of the connected video equipment.
3. Press the POWER button.
   - It may take about 1 minute for the lamp to light up.
   - The lamp fails to light up on rare occasions. In such a case, wait for a few minutes and then try again.
   - Do not cover the lens with the lens cap while the lamp is on. Do not strip off the aluminium sheet inside the lens cap.
   - After the POWER button is pressed, the image may flicker before the lamp becomes stable. This is not a product malfunction.
   - The lamp operation becomes stable in 1 minute after the power is turned on and then the lamp mode selected in the menu is activated. During the activation, displayed images may be disturbed.
   - The projector starts warming up when the POWER button is pressed. During the warm-up process, images may appear dark and no commands are accepted.
   - By blinking red, the STATUS indicator indicates that the lamp should be replaced soon. Replace the lamp when the STATUS indicator blinks red. (See page 42.)
4. Press the ZOOM/FOCUS button to display the ZOOM/FOCUS menu.
5. Adjust with the ◀ or ▶ button to get a fine picture.
   - When the ENTER button is pressed while the ZOOM/FOCUS menu is displayed, the adjustment mode is switched between FAST and STEP. When FAST is selected, the speed of focus controlled by the ◀ or ▶ button becomes fast, and it becomes slow when STEP is selected.
6. Select an input source.
   - Press the VIDEO/HDMI button on the projector or the VIDEO, S-VIDEO or HDMI button on the remote control that is corresponding to the terminal in use.
   - The input source is switched between VIDEO, S-VIDEO and HDMI at every press of the VIDEO/HDMI button on the projector.
   - You cannot change the input source while the menu is being displayed.
   - Though it may take some time before an image is displayed on the screen depending on the type of the input signal, such symptom is not a malfunction.
   - Some images become easier to view when the setting of aspect ratio is changed. (See page 24.)
   - When projecting images from a DVD player that is connected to the COMPUTER/COMPONENT VIDEO DVI-D IN (HDCP) terminal, press the COMPUTER/DVI-D button on the projector to select DVI or press the DVI-D (HDCP) button on the remote control.
   - When projecting images from a DVD player that is connected to the COMPUTER/COMPONENT VIDEO IN-1 or COMPUTER/COMPONENT VIDEO IN-2 terminal, press the COMPUTER/DVI-D button on the projector or the COMPUTER 1 or COMPUTER 2 button on the remote control.
   - When COMPUTER 1 or COMPUTER 2 is chosen as the source, images supplied from the computer may flicker. Press the ◀ or ▶ button on the remote control to reduce flicker, if it occurs. (Fine adjustment)

7. Adjust the position of the projector to keep an appropriate projection distance with which images are projected in their specified sizes.
8. Adjust the position of the projector so that the projector and the screen are perpendicular to each other. (See page 10.)
   - When the projector cannot be positioned perpendicularly to the screen, adjust the projection angle. (See page 11.)
9. Press the ZOOM/FOCUS button to display the ZOOM/FOCUS menu.
10. Adjust with the ▲ or ▼ button to get an approximate size.
    - When the ENTER button is pressed while the ZOOM/FOCUS menu is displayed, the adjustment mode is switched between FAST and STEP. When FAST is selected, the speed of zoom controlled by the ▲ or ▼ button becomes fast, and it becomes slow when STEP is selected.
11. Press the LENS SHIFT button. The LENS SHIFT menu appears at the center of the screen.
12. Press the ▲ or ▼ button to adjust the vertical position and ◀ or ▶ button to adjust the horizontal position of the displayed image.
    - When the image is not displayed within the screen, adjust the projection angle. In addition, perform the keystone adjustment, if necessary. (See page 11.)

Repeat steps 4, 5 and 9 to 12, if necessary.

Important:
- Focus, zoom and lens shift adjustment is possible in the normal picture mode only.

To stop projecting:

13. Press the POWER button.
    - A confirmation message is displayed.
    - To cancel the procedure, leave the projector for a while or press any button except the POWER button.
14. Press the POWER button again.
    - The lamp goes out and the projector goes into a standby mode. In this standby mode, the STATUS indicator blinks green.
15. Wait about 2 minutes for the STATUS indicator to be turned off.
    - During this period of 2 minutes in the standby mode, the intake fan and exhaust fan rotate to cool the lamp.
    - The air outlet fans rotate faster as the temperature around the projector rises.
    - Though the fans make loud sounds during cooling, such symptom is not a malfunction.
16. Turn off the main power switch.
    - The POWER indicator will go out.
    - If the main power switch should be turned off or the power cord should be unplugged accidentally while either the air inlet fan or the air outlet fans are operating or the lamp is on, allow the projector to cool down for 10 minutes with the power off. To light the lamp again, press the POWER button. If the lamp doesn't light up immediately, repeat pressing the POWER button 2 or 3 times. If it should still fail to light up, replace the lamp.
    - Cover the lens with the lens cap to protect it from dust.
    - For safety's sake, unplug the power cord from the outlet.
    - When you repeat turning off the main switch within 30 minutes from the lamp illumination, an error may occur in the clock function of this product.

Instant Shut Down

You can turn off this projector just by turning off the power switch or unplugging the power cord without pressing the POWER button.
- Don't shut down the projector while the STATUS indicator is blinking after the lamp lights up because the lamp's life may be shortened.
- Don't turn the projector back on right after shutting it down because the lamp's life may be shortened. (Wait about 10 minutes before turning the projector back on.)
- Before shutting down the projector, be sure to close the menu screen. If you shut down the projector without closing the menu, the setting data of the menu may not be saved.
- If you shut down the projector while controlling the projector using the network function, the application software such as ProjectorView may fail. For details, see "User Guide of LAN Control Utility" contained in the CD-ROM.

Volume from the speaker

Press the VOLUME + or - button to change the volume from the speaker.
The volume control bar will appear on the screen.

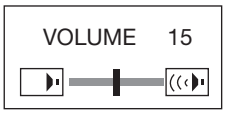

- The volume control bar will disappear about 10 seconds after the VOLUME button is released.
- The VOLUME buttons don't function while the menu selection bar or the menu is being displayed.
- When a high-level audio signal, such as a DVD audio signal, is supplied to the AUDIO IN terminals, the output from the speaker may be distorted.
- When the audio cable is connected to the AUDIO OUT terminal, the speaker output is muted.
- The volume of the audio from the AUDIO OUT terminal is also changed by pressing the VOLUME buttons.
- The volume of the audio from the AUDIO OUT terminal varies within the range between 0 and 31.

Setting the aspect ratio

You can change the aspect ratio of the input video signal (or the ratio of width to height of the image). Change the setting according to the type of the input video signal.

How to change the settings:

With the remote control:

1. Press the ASPECT button.
   - Every time the ASPECT button is pressed, the aspect mode changes from NORMAL to 16:9, to FULL, and back to NORMAL.
     - NORMAL:
       Select to change the aspect ratio automatically depending on the input signal. (Select this option for normal use.)
     - 16:9:
       Select to expand squeezed (or horizontally compressed) images such as DVD images to 16:9.
     - FULL:
       Select to project images in full size (1024 x 768 pixels) irrespective of type of input signal.

With the QUICK MENU or FEATURE menu:
(See page 26 for menu setting.)

1. Display the QUICK MENU or FEATURE menu.
2. Select ASPECT by pressing the ▲ or ▼ button.
3. Select your desired aspect ratio by pressing the ◀ or ▶ button.

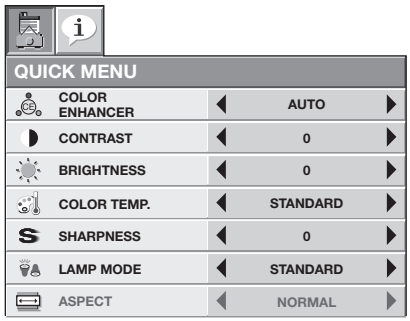

When 16:9 ⏎ is selected with the FEATURE menu, you can make further settings using the following procedures.

4. Press the ENTER button.
5. Select an item you want to set by pressing the ▲ or ▼ button and select a setting by pressing the ◀ or ▶ button.
   - POSITION:
     You can select the image display position within the screen from UPPER, CENTER, and LOWER.
   - MODE:
     You can select whether or not to display signals at 16:9 depending on their type.
     - ALL SIGNAL:
       All signals are always displayed at 16:9 irrespective of their type.
     - VIDEO ONLY:
       Signals supplied from video devices only are displayed at 16:9.

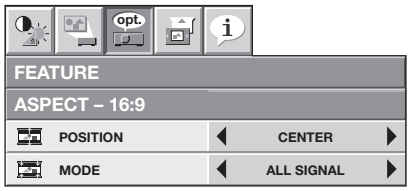

To cancel the menu:

6. Press the MENU button.

Important:

- When a 16:9 image is kept displayed for a long time before displaying 4:3 image, the afterimages of the black bars may appear on the 4:3 image screen. Consult your dealer in this case.

Menu operation

You can make various settings using the displayed menus.

Menu display mode and menu type

There are two menu display modes: QUICK MENU mode and DETAIL MENU mode.
Each mode has the following menus.

Menus displayed in the QUICK MENU mode

The QUICK MENU contains frequently used setting items and the INFOMATION menu shows the projector condition.

QUICK MENU (page 27)

QUICK MENU	
COLOR ENHANCER	AUTO
CONTRAST	0
BRIGHTNESS	0
COLOR TEMP.	STANDARD
SHARPNESS	0
LAMP MODE	STANDARD
ASPECT	NORMAL
COLOR	0
SELECT USER MENU	COLOR
DETAIL MENU	OK

INFORMATION menu (page 28)

INFORMATION	
LAMP TIME (LOW)	0 H
INPUT	COMPUTER2
RESOLUTION	1024 x 768
VERTICAL FREQUENCY	75.04 Hz
HORIZONTAL FREQUENCY	60.02 KHz
SYNC. TYPE	5WIRE

Menus displayed in the DETAIL MENU mode

Following 5 menus are displayed for making detailed settings.

IMAGE menu (page 29)

IMAGE	
COLOR ENHANCER	AUTO
CONTRAST	0
BRIGHTNESS	0
COLOR TEMP.	STANDARD
COLOR	0
TINT	0
SHARPNESS	0
ADVANCED MENU	OK

INSTALLATION menu (page 30)

INSTALLATION	
LAMP MODE	STANDARD
STANDBY MODE	STANDARD
AUTO POWER ON	OFF
AUTO POWER OFF	OFF
IMAGE CAPTURE	GO
SPLASH SCREEN	ON
BACK COLOR	BLUE
AV MUTE MODE	BLACK
IMAGE REVERSE	OFF
LENS LOCK	OK

FEATURE menu (page 31)

FEATURE	
ASPECT	NORMAL
PASSWORD FUNCTION	DISPLAY INPUT
MENU POSITION	1.
CINEMA MODE	AUTO
VIDEO SIGNAL	AUTO
SETUP	AUTO
SCART INPUT	OFF
LANGUAGE	English
RESET ALL	OK

SIGNAL menu (page 32)

SIGNAL	
MEMORY CALL	AUTO
RESOLUTION (MEMORIZE)	1024 x 768
HORIZ. POSITION	0
VERT. POSITION	0
FINE SYNC.	0
TRACKING	0
COMPUTER INPUT	RGB
OVER SCAN	100%
HOLD	OFF
USER	OK

INFORMATION menu (page 28)

INFORMATION	
LAMP TIME (LOW)	0 H
INPUT	COMPUTER2
RESOLUTION	1024 x 768
VERTICAL FREQUENCY	75.04 Hz
HORIZONTAL FREQUENCY	60.02 KHz
SYNC. TYPE	5WIRE

Basic procedure for setting the menus

1. Press the MENU button.
   - The menu selection bar is displayed in the QUICK MENU mode.

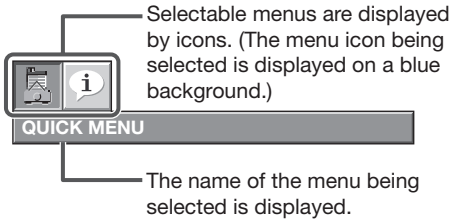

2. Press the ◀ or ▶ button to select a menu to use.
3. Press the ENTER button (or ▼ button).
   - The selected menu is displayed.

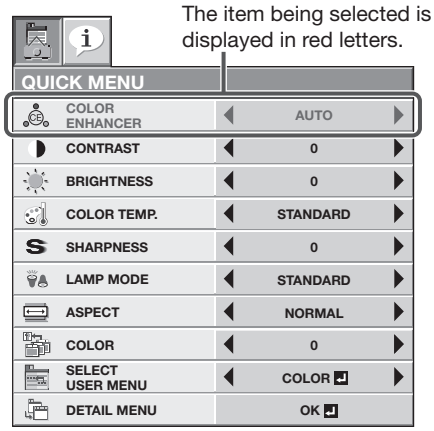

4. Press the ▲ or ▼ button to select an item to adjust.

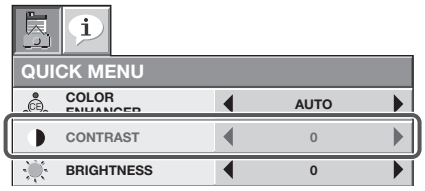

5. Set the selected item by pressing the ◀ or ▶ button.

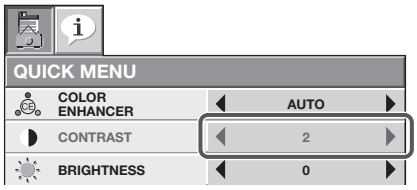

6. To cancel the menu, press the MENU button several times.

Important:
- When an item marked with "↵" is selected, pressing the ENTER button makes its value effective or displays another screen for further setting.
- When the MENU button doesn't function, unplug the power cord from the wall outlet. Wait about 10 minutes, plug the power cord in, and try again.

Changing from the QUICK MENU mode to the DETAIL MENU mode

1. Display the QUICK MENU according to steps 1 to 3 described on the left.

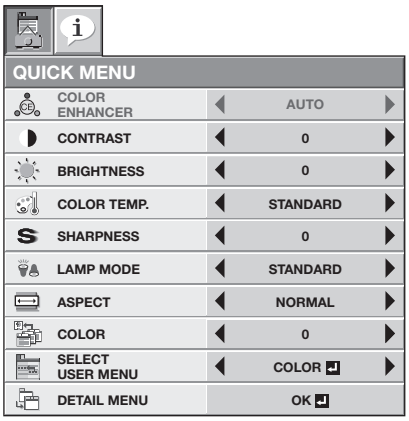

2. Press the ▲ or ▼ button to select DETAIL MENU.

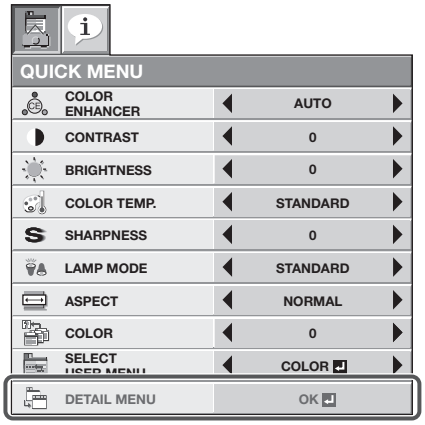

3. Press the ENTER button.
   - The DETAIL MENU mode is activated. (You can select 5 menus.)

   - Make settings according to steps 2 to 5 on the left, as necessary.

4. To cancel the menu, press the MENU button several times.

Settings of each menu item

Menus displayed in the QUICK MENU mode

QUICK MENU

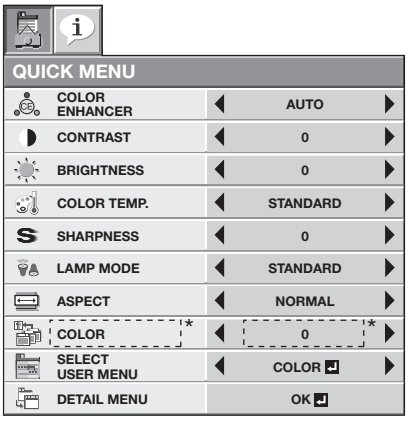

ITEM	SETTING	FUNCTION
COLOR ENHANCER	AUTO	Select to optimize the settings automatically depending on the input signal. (Select this option for normal use.)
	PRESENTATION	Select to make the displayed image look bright and crisp.
	STANDARD	Select to make the displayed image look natural.
	THEATER	This option, suitable for viewing movies, makes the displayed image look soft and smooth.
	sRGB	Select to give priority to the color reproducibility.
	USER	The values of the gamma curve, BrilliantColor™, color intensity, and color balance that are set by USER ↵ of COLOR ENHANCER in the IMAGE menu are applied. (See page 29.)
CONTRAST	±30	Use to adjust the contrast of the projected image. (See page 33.)
BRIGHTNESS	±30	Use to adjust the brightness of the projected image. (See page 33.)
COLOR TEMP.	STANDARD / LOW / HIGH	Select from the predetermined color temperatures.
	USER	The color temperature that is set by USER ↵ of COLOR TEMP. in the IMAGE menu is applied. (See page 29.)
SHARPNESS	±5	Use to adjust the sharpness of the projected image. (See page 33.)
LAMP MODE	STANDARD	Select this option when you want to view images in a well-lit room.
	LOW	Select to moderate the intensity of the lamp. The operating sound is reduced and the lamp lifetime becomes longer. • When the lamp mode is switched, the projected image may flicker. • Frequent switching of the lamp mode may damage the lamp.
ASPECT	NORMAL	Select to change the aspect ratio automatically depending on the input signal. (Select this option for normal use.)
	16:9	Select to expand squeezed (or horizontally compressed) images such as DVD images to 16:9. When selecting 16:9 ↵ of ASPECT in the FEATURE menu, you can make settings such as positioning of the displayed image and selection of signals expanded by this function. (See page 24.)
	FULL	Select to project images in full size (1024 x 768 pixels) irrespective of type of input signal.
(USER MENU) *	*	*: The item selected in SELECT USER MENU below and its value are displayed.
SELECT USER MENU	COLOR ↵ / TINT ↵ / STANDBY MODE ↵ / IMAGE REVERSE ↵ / MENU POSITION ↵ / CINEMA MODE ↵ / SCART INPUT ↵ / LANGUAGE ↵	Select the item to be displayed in the preceding row. For the details of the selectable items, see the following pages. • COLOR, TINT ..... page 29 • STANDBY MODE, IMAGE REVERSE ..... page 30 • MENU POSITION, CINEMA MODE, SCART INPUT, LANGUAGE ..... page 31
DETAIL MENU	OK ↵	Select to change the menu display mode to the DETAIL MENU mode.

- When COLOR ENHANCER is sRGB, COLOR TEMP., COLOR and TINT can't be adjusted.
- When the setting of COLOR ENHANCER is changed, the displayed image may be disturbed.

Menus displayed in the QUICK MENU mode and the DETAIL MENU mode

INFORMATION menu

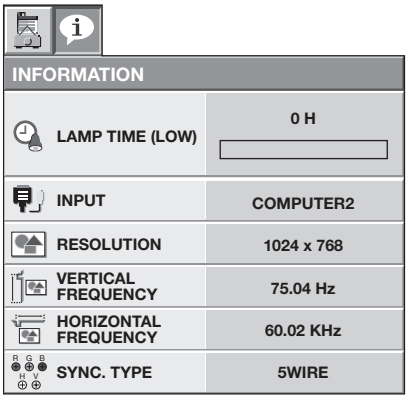

ITEM	DESCRIPTION
LAMP TIME (LOW)	This item shows a lamp operating time (hour) calculated based on that LAMP MODE is LOW. • When the LAMP MODE is STANDARD, this item shows a longer lamp operating time than the actual time. (See page 43 for the interval of lamp replacement.) • When the lamp operating time is 0 to 10 hours, “0H” is displayed. The lamp operating time exceeding 10 hours is indicated by the actual hours. • When the lamp operating time reaches 3000 hours, the bar turns to yellow. When it reaches 3800 hours, the bar turns to red.
INPUT	Indicates the name of the terminal to which the currently projected video signal is being input.
RESOLUTION	Indicates the resolution of the currently projected video signal.
VERTICAL FREQUENCY	Indicates the vertical frequency of the currently projected video signal.
HORIZONTAL FREQUENCY	Indicates the horizontal frequency of the currently projected video signal.
SYNC. TYPE	Indicates the type of the sync signal for the currently projected video signal.

Menus displayed in the DETAIL MENU mode

IMAGE menu

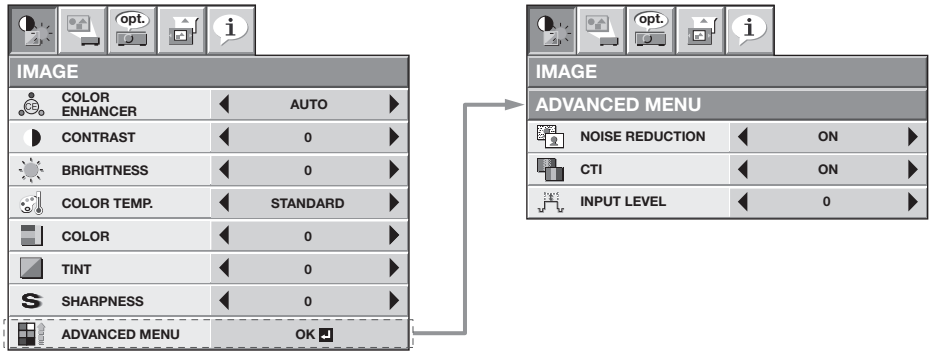

ITEM	SETTING	FUNCTION
COLOR ENHANCER	AUTO	Select to optimize the settings automatically depending on the input signal. (Select this option for normal use.)
	PRESENTATION	Select to make the displayed image look bright and crisp.
	STANDARD	Select to make the displayed image look natural.
	THEATER	This option, suitable for viewing movies, makes the displayed image look soft and smooth.
	sRGB	Select to give priority to the color reproducibility.
	USER ↵	Select to set the gamma curve, set BrilliantColor™ or adjust the color intensity or color balance as desired. (See page 34.)
CONTRAST	±30	Use to adjust the contrast of the projected image. (See page 33.)
BRIGHTNESS	±30	Use to adjust the brightness of the projected image. (See page 33.)
COLOR TEMP.	STANDARD / LOW / HIGH	Select from the predetermined color temperatures.
	USER ↵	Use to adjust the color temperature to a desired value. (See page 34.)
COLOR	±10	Use to adjust the color thickness of the projected image. (See page 33.)
TINT	±10	Use to adjust the color tint of the projected image. (See page 33.)
SHARPNESS	±5	Use to adjust the sharpness of the projected image. (See page 33.)
ADVANCED MENU	OK ↵	The ADVANCED MENU is displayed for the following settings.
NOISE REDUCTION	ON / OFF	Use to reduce noise and roughness in the image when noisy video signal is input.
CTI	ON / OFF	Use to correct smeared color boundaries.
INPUT LEVEL	±5	For analog signal input: The input level of video signal differs among devices to be connected. High input level causes solid white in displayed image and low input level causes displayed image to get dark. Use this menu to adjust the input level of analog video signal.
	ENHANCED / NORMAL	For digital signal input: When a digital signal is input, ENHANCED and NORMAL are switchable. (See page 21.)

- When COLOR ENHANCER is sRGB, COLOR TEMP., COLOR and TINT can't be adjusted.
- When the setting of COLOR ENHANCER is changed, the displayed image may be disturbed.
- When the COMPUTER1, COMPUTER2, DVI or HDMI is selected as the input source, COLOR and TINT can't be adjusted.
- TINT is available only when the NTSC signal is input.
- INPUT LEVEL is unavailable when the digital signal is supplied from the YC_BC_R/YP_BP_R terminal of the connected device.

INSTALLATION menu

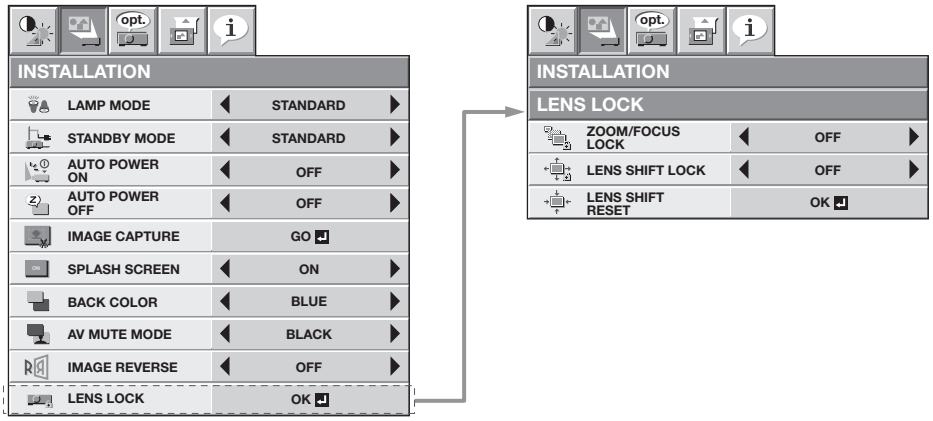

ITEM	SETTING	FUNCTION
LAMP MODE	STANDARD	Select this option when you want to view images in a well-lit room.
	LOW	Select to moderate the intensity of the lamp. The operating sound is reduced and the lamp lifetime becomes longer.
STANDBY MODE	STANDARD	Select this option when you control the projector via LAN during power standby.
	LOW	Select this option when you don't control the projector via LAN during power standby. This option disables the LAN terminal and reduces the power consumption during the power standby.
AUTO POWER ON	ON / OFF	When ON is chosen, the lamp is automatically lit when the power cord is plugged in the wall outlet. Choose ON when using the projector mounted on the ceiling. • The projector is in the stand-by mode when the lamp is off. Use the remote control to turn on the lamp.
AUTO POWER OFF	OFF / 5-60min	Use to set the time elapsed before the projector enters the stand-by mode when there is no signal input from the source.
IMAGE CAPTURE	GO ↵	Use to capture the screen for the splash screen. (See page .37.)
SPLASH SCREEN	ON / OFF	Choose ON to display the splash screen when the power is turned on. • The splash screen can be changed. (See page 37.)
BACK COLOR	BLUE / BLACK / IMAGE	Use to select the background from among BLUE, BLACK and IMAGE, which will be displayed when there is no signal input from the source. When IMAGE is selected, the splash screen will be displayed.
AV MUTE MODE	BLACK / IMAGE	Use to choose the background, either BLACK, or IMAGE, which will be displayed when the AV MUTE button is pressed. When IMAGE is chosen, the splash screen will be displayed.
IMAGE REVERSE	OFF	Select when viewing images from the front with the projector installed on the floor.
	MIRROR	Select when viewing images projected from the behind of the screen with the projector installed on the floor.
	INVERT	Select when viewing images projected from the behind of the screen with the projector installed on the ceiling.
	MIRROR INVERT	Select when viewing images from the front with the projector installed on the ceiling.
LENS LOCK	OK ↵	The LENS LOCK menu is displayed for the following settings.
ZOOM/FOCUS LOCK	ON / OFF	Use to enable or cancel the FOCUS LOCK and ZOOM LOCK.
LENS SHIFT LOCK	ON / OFF	Use to enable or cancel the LENS SHIFT LOCK.
LENS SHIFT RESET	OK ↵	Use to reset the position of the lens to the factory setting.

- Regardless of the setting of LAMP MODE in the INSTALLATION menu, the STANDARD lamp mode is activated by default whenever the projector is turned on. When LAMP MODE has been set to LOW, the lamp mode changes from STANDARD to LOW about 1 minute after turn-on.
- When the lamp mode is switched, the projected image may flicker.
- Frequent switching of the lamp mode may damage the lamp.
- You can't set IMAGE CAPTURE and SPLASH SCREEN when PASSWORD FUNCTION in the FEATURE menu has been set to SPLASH ID SCREEN to enable the password lock.
- When you continue projection for a long time with BACK COLOR or AV MUTE MODE set to IMAGE, an afterimage may persist on the screen. Consult your dealer in this case.

FEATURE menu

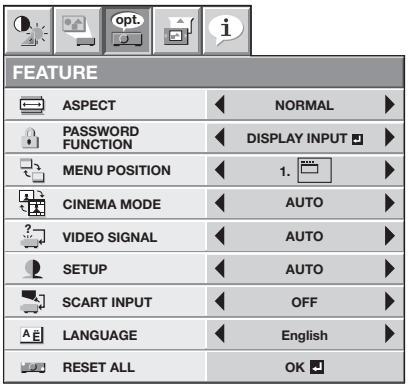

ITEM	SETTING	FUNCTION
ASPECT	NORMAL	Select to change the aspect ratio automatically depending on the input signal. (Select this option for normal use.)
	16:9 ↵	Select to expand squeezed (or horizontally compressed) images such as DVD images to 16:9. Press the ENTER button to make further settings such as positioning of the displayed image and selection of signals expanded by this function.
	FULL	Select to project images in full size (1024 x 768 pixels) irrespective of type of input signal.
PASSWORD FUNCTION	DISPLAY INPUT ↵ / MENU ACCESS ↵ / SPLASH ID SCREEN ↵	Use to enable or cancel the password lock. See page 38 for details.
MENU POSITION	1 (upper left) / 2 (lower right)	Use to change the position of the menu.
CINEMA MODE	AUTO	The film mode will be automatically activated when a film source signal is input. Select AUTO for normal use. When flicker occurs on the screen, frame dropping or other incorrect display occurs, or jaggies on slanting lines are remarkable, select either FILM or VIDEO, which improves the symptom better.
	FILM	Fixed to the film mode.
	VIDEO	The film mode will not be activated.
VIDEO SIGNAL	AUTO / NTSC / PAL / SECAM / 4.43NTSC / PAL-M / PAL-N / PAL-60	When AUTO is selected, the appropriate video format is automatically selected depending on the input signal. If the image isn't displayed correctly, select the desired video format manually.
SETUP	AUTO	Select to change the SETUP mode automatically.
	OFF	Select to make black lighter.
	3.75% / 7.5%	Select to make black thicker. • When 7.5% is chosen, the brightness is decreased by the set-up cancel function for the U.S. Choose OFF when the image is dark.
SCART INPUT	ON / OFF	Choose ON when connecting the projector with a device equipped with the SCART terminal that can output RGB signal. SCART terminal is used mainly in Europe. Choose OFF normally. (Available only for the input signal from the COMPUTER/COMPONENT VIDEO IN-1 terminal.)
LANGUAGE	日本語 / English / Español / Deutsch / Français / Italiano / 中文 / 한국어 / РУССКИЙ / PORTUGUÊS / SVENSKA / POLSKI	Use to select the language used in the menus.
RESET ALL	OK ↵	Use to reset the settings of the menu (excluding IMAGE CAPTURE, PASSWORD FUNCTION and LANGUAGE) to the factory setting values.

- CINEMA MODE can be adjusted only when a TV60, TV50, 480i, 576i or 1080i signal is being displayed.
- When SCART INPUT is set to ON, nothing is output to the external monitor.
- When SCART INPUT is set to ON, normal computer signals aren't projected.
- Use a commercially available SCART-Mini D-SUB 15-pin cable when connecting this projector with an AV device equipped with the SCART terminal.
- Some AV devices equipped with the SCART terminal aren't compatible with this projector.

SIGNAL menu

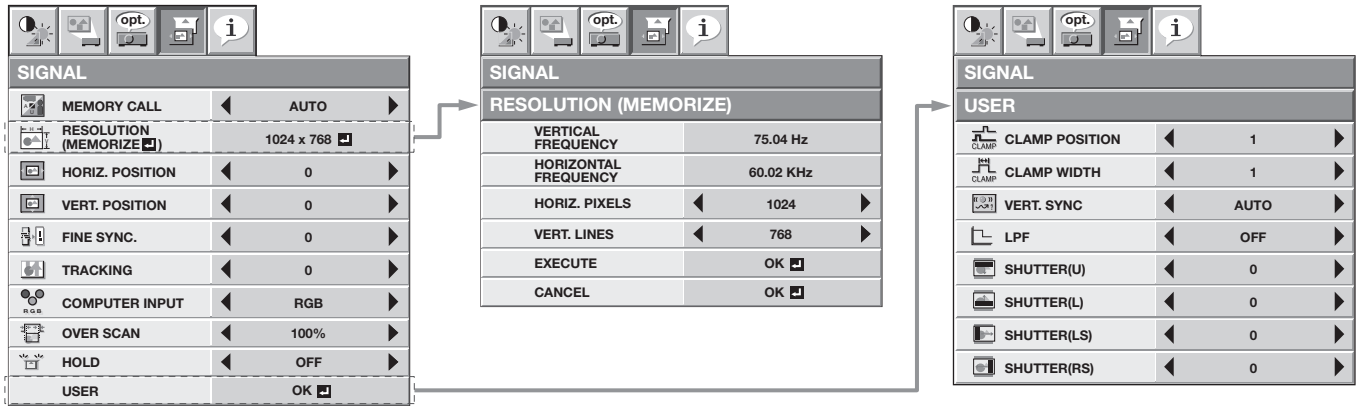

ITEM	SETTING	FUNCTION
MEMORY CALL	AUTO / MEMORY 1 ↵ / MEMORY 2 ↵	Use to select the setting of RESOLUTION (MEMORIZE) already saved. Impossible to select if no setting has been saved. AUTO is selected by default. It optimizes the signal format automatically depending on the type of video signal supplied from the computer. Press the ENTER button to clear the setting already saved.
RESOLUTION (MEMORIZE ↵)		The current resolution is displayed. To change the current setting, press the ENTER button to display the RESOLUTION (MEMORIZE) menu. The new setting can be saved to MEMORY 1 or MEMORY 2.
VERTICAL FREQUENCY	-	The vertical frequency of the currently projected video signal is displayed.
HORIZONTAL FREQUENCY	-	The horizontal frequency of the currently projected video signal is displayed.
HORIZ. PIXELS	640-1920	The number of horizontal pixels of the currently projected video signal is displayed. When you change the current setting, select EXECUTE, and then press the ENTER button, the image is automatically adjusted according to the resolution you set. The adjustment result can be saved to MEMORY 1 or MEMORY 2.
VERT. LINES	350-1200	The number of vertical pixels of the currently projected video signal is displayed. When you change the current setting, select EXECUTE, and then press the ENTER button, the image is automatically adjusted according to the resolution you set. The adjustment result can be saved to MEMORY 1 or MEMORY 2.
EXECUTE	OK ↵	Press the ENTER button to start the automatic adjustment. At the completion of the automatic adjustment, a message is displayed and you can save the adjustment result to MEMORY 1 or MEMORY 2.
CANCEL	OK ↵	The process to change the current resolution is canceled and the SIGNAL menu is displayed.
HORIZ. POSITION	0-999	Use to adjust the horizontal position of the projected image.
VERT. POSITION	0-999	Use to adjust the vertical position of the projected image.
FINE SYNC.	0-31	Use to eliminate flickering or blur, if appears, viewing the projected image.
TRACKING	0-9999	Use to eliminate vertical wide stripes, if appears, viewing the projected image.
COMPUTER INPUT	AUTO	The proper setting is automatically selected.
	RGB	Select this option when connecting the projector to high definition video equipment having R, G, and B output terminals.
	YC_BC_R/YP_BP_R	Select this option when connecting the projector to a DVD player or other device having Y, C_B, and C_R (or Y, P_B, and P_R) component video output terminals.
OVER SCAN	100%-90%	Use to adjust the display area of projected image.
HOLD	OFF / ON ↵	Use to adjust the image when flagging occurs near the top of the screen.
USER	OK ↵	The USER menu is displayed for the following adjustments.
CLAMP POSITION	1-255	Use to correct solid white or solid black in the projected image.
CLAMP WIDTH	1-63	Use to correct solid black in the projected image.
VERT.SYNC	AUTO / OFF	Use to adjust the image when its motion doesn't run smoothly. Select AUTO for normal use.
LPF	ON / OFF	Use to select whether or not to enable the LPF.
SHUTTER(U)	0-38	Use to adjust the image when noise appears on the top part of the image.
SHUTTER(L)	0-38	Use to adjust the image when noise appears on the bottom part of the image.
SHUTTER(LS)	0-63	Use to adjust the image when noise appears on the left half of the image.
SHUTTER(RS)	0-63	Use to adjust the image when noise appears on the right half of the image.

- Though horizontal strips may appear on the enlarged projected image, such symptom is not a malfunction.
- When you change the horizontal or vertical position to a large extent, noise may appear.
- The adjustable range of the vertical position varies depending on the type of the input signal. Though the image may stay in the same position even when the setting value is changed, such symptom is not a malfunction.
- SHUTTER will not work correctly during keystone adjustment.
- When you increase the setting value of OVER SCAN, noise may appear on the screen.
- See pages 35 and 36 for the detailed setting procedure.

Important:
- You can set the IMAGE menu and the SIGNAL menu only when the signal is supplied.

Adjusting projected images

To adjust the brightness (CONTRAST and BRIGHTNESS):

You can make adjustments for the brightness of the projected image using the menu.
(See page 26 for menu setting.)

1. Display the QUICK MENU or IMAGE menu.
2. Select CONTRAST or BRIGHTNESS by pressing the ▲ or ▼ button.
3. Adjust the selected item by pressing the ◀ or ▶ button.

To cancel the menu:

4. Press the MENU button.

CONTRAST

Select to adjust the contrast of the image. Every time the ▶ button is pressed, the image becomes brighter and more defined. Every time the ◀ button is pressed, the image becomes darker and less defined.

BRIGHTNESS

Every time the ▶ button is pressed, the image becomes brighter. Every time the ◀ button is pressed, the image becomes darker.

To adjust the color (COLOR and TINT):

You can adjust the color of the projected image using the menu.
(See page 26 for menu setting.)

1. Display the QUICK MENU or IMAGE menu.
2. Select COLOR or TINT by pressing the ▲ or ▼ button.
   - COLOR or TINT is unavailable when COMPUTER1, COMPUTER2, DVI or HDMI is selected as the input source.
   - TINT is available only when the NTSC signal is input.
3. Adjust the selected item by pressing the ◀ or ▶ button.

To cancel the menu:

4. Press the MENU button.

COLOR

Use to adjust the color thickness of the projected image. Every time the ▶ button is pressed, the color becomes thicker. Every time the ◀ button is pressed, the color becomes lighter.

TINT

Use to adjust the tint of the projected image. Every time the ▶ button is pressed, the image appears more greenish. Every time the ◀ button is pressed, the image appears more reddish.

To sharpen or soften the projected image (SHARPNESS):

You can adjust the sharpness of the projected image using the menu.
(See page 26 for menu setting.)

1. Display the QUICK MENU or IMAGE menu.
2. Select SHARPNESS by pressing the ▲ or ▼ button.
3. Adjust the selected item by pressing the ◀ or ▶ button.

To cancel the menu:

4. Press the MENU button.

To adjust the tone of white (COLOR TEMP.):

You can select a preset color temperature (white tone) using the menu.
(See page 26 for menu setting.)

1. Display the QUICK MENU or IMAGE menu.
2. Select COLOR TEMP. by pressing the ▲ or ▼ button.
3. Select your desired color temperature by pressing the ◀ or ▶ button.

To cancel the menu:

4. Press the MENU button.

To adjust the tone of white (To customize the color temperature):

To customize (and store) the color temperature to your preference, carry out the following procedure.
(See page 26 for menu setting.)

1. Select COLOR TEMP. in the IMAGE menu.
2. Press the ◀ or ▶ button to select USER ↵.
3. Press the ENTER button.
4. Press the ▲ or ▼ button to select the desired item.
5. Press the ◀ or ▶ button to adjust the selected item.
6. Repeat steps 4 and 5 for optimum adjustment results.

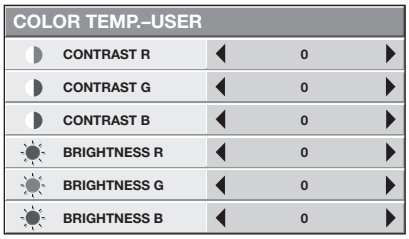

To cancel the menu:
7. Press the MENU button.

To enable the stored color temperature:
1. Set COLOR TEMP. to USER in the QUICK MENU or set it to USER ↵ in the IMAGE menu.

About color temperature

There are different kinds of white color. Color temperature is a way to show the differences in white. White of which temperature is low appears reddish. When the color temperature rises, white appears bluish. For example, you can change the color temperature using the following procedures.
To raise the color temperature: Increase the CONTRAST B (blue) and decrease the CONTRAST R (red).
To reduce the color temperature: Decrease the CONTRAST B (blue) and increase the CONTRAST R (red).
- If you set all of CONTRAST R, G, and B to negative values, the original brightness of the image can't be obtained even when you maximize CONTRAST in the IMAGE menu.

Color Enhancer

You can set the user-defined balance between the brightness and hue using the menu. (See page 26 for menu setting.)

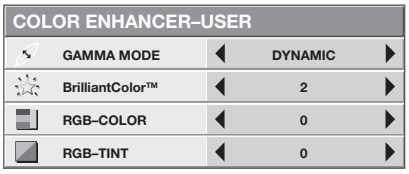

With the IMAGE menu:
1. Display the IMAGE menu.
2. Select COLOR ENHANCER by pressing the ▲ or ▼ button.
3. Select USER ↵ by pressing the ◀ or ▶ button.
4. Press the ENTER button.
5. Select an item you want to set by pressing the ▲ or ▼ button.

GAMMA mode
Use this item to set the gamma optimally.
DYNAMIC ……Select when viewing images supplied from the computer.
NATURAL ……Select when viewing images supplied from the video device.
DETAIL ……Select when viewing images of which brightness should be kept relatively low, such as movies and music performance.

BrilliantColor™
Use this item to make the colors having medium brightness such as yellow and skin tone look natural. Press the ◀ button to decrease the value to lessen the effect. Press the ▶ button to increase the value to heighten the effect. (BrilliantColor™ doesn't work at value 0.)

6. Select a setting value by pressing the ◀ or ▶ button.
- For more enhanced color reproduction, set BrilliantColor™ to 0. The white portion of the color wheel will be disabled and you can reproduce true-to-life images.

RGB-COLOR
Use to adjust the color intensity of the projected image. Every time the ▶ button is pressed, the color becomes thicker. Every time the ◀ button is pressed, the color becomes lighter.

RGB-TINT
Use to adjust the color balance of the projected image. Every time the ▶ button is pressed, the image appears more greenish. Every time the ◀ button is pressed, the image appears more reddish.

Important:
- You can adjust Color Enhancer also by pressing the CE button on the remote control.

With the remote control:
1. Press the CE button on the remote control.
   A window for color enhancer adjustment appears on the upper right of the screen.
2. Press the ◀ or ▶ button to select USER ↵.
3. Press the ENTER button.
4. Press the ▲ or ▼ button to select GAMMA MODE, BrilliantColor™, RGB-COLOR or RGB-TINT.
5. Press the ◀ or ▶ button to adjust the selected item.

How to adjust the computer image

This projector automatically selects a proper signal format according to the type of video signal supplied from the computer. However, video signals from the computer may not be projected correctly depending on the types of the computer and images to be projected. In such a case, make adjustment according to the flowchart below.

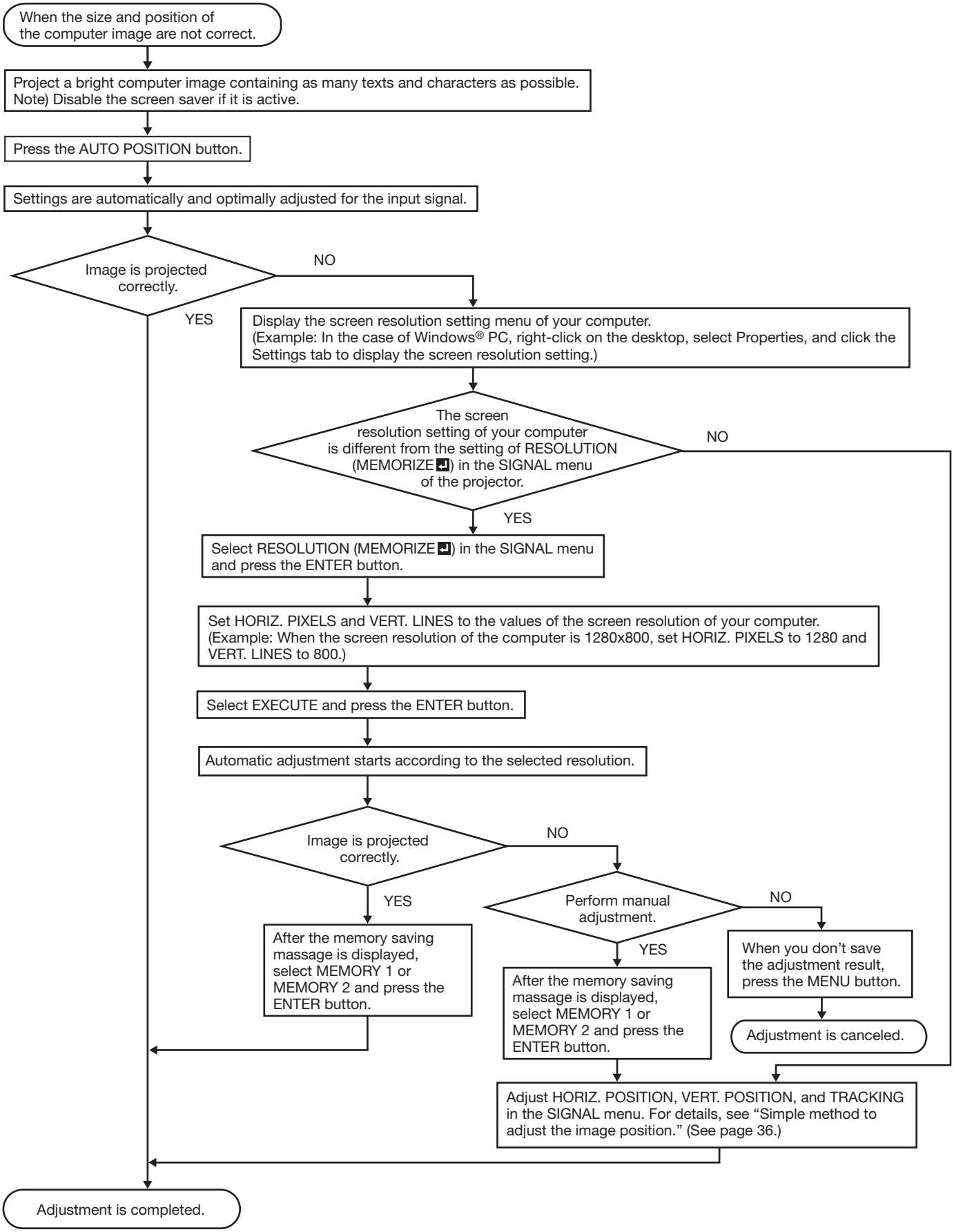

How to adjust the image supplied from the computer using the menu:

Carry out the following procedures according to the symptoms.

Wide strips appear.	Adjust TRACKING in the SIGNAL menu.
The projected image flickers.	
The projected image is blurred.	Adjust FINE SYNC. in the SIGNAL menu.
The projected image is displaced horizontally.	Adjust HORIZ.POSITION in the SIGNAL menu. Every time the ◀ button is pressed, the image moves to the right. Every time the ▶ button is pressed, the image moves to the left.
The projected image is displaced vertically.	Adjust VERT.POSITION in the SIGNAL menu. Every time the ◀ button is pressed, the image moves down. Every time the ▶ button is pressed, the image moves up.
The top part of the image flags.	Change the setting of HOLD in the SIGNAL menu. Select ON ⏎, press the ENTER button, and adjust BEGIN or END to minimize the flagging.
A solid black or solid white appears in the image.	Adjust CLAMP POSITION or CLAMP WIDTH in the SIGNAL - USER menu.
The motion doesn't run smoothly.	Adjust VERT. SYNC in the SIGNAL - USER menu. Select AUTO for normal use.
Noise appears on the right or left half of the image.	Adjust SHUTTER(LS) or SHUTTER(RS) in the SIGNAL - USER menu.
Noise appears on the top or bottom part of the image.	Adjust SHUTTER(U) or SHUTTER(L) in the SIGNAL - USER menu.

1. Display the SIGNALmenu.
2. Press the ▲ or ▼ button to select an item to adjust.
3. Adjust the selected item by pressing the ◀ or ▶ button.

To cancel the menu:

4. Press the MENU button.

- Do not change the settings of the SIGNAL menu in normal use.

Simple method to adjust the image position

To adjust the horizontal position:

1. Align the left edge of the image with the left side of the screen by adjusting HORIZ.POSITION. Then, align the right edge of the image with the right side of the screen by adjusting TRACKING.
2. Repeat step 1 above to complete the adjustment of the horizontal position.

To adjust the vertical position:

3. Align the upper edge of the image with the upper side of the screen by adjusting VERT.POSITION.

LPF (Progressive filter)

You can select whether or not to enable the LPF.
Vertical or horizontal streak noise may appear on the projected image, depending on the type of the DVD player or game console you use. In such a case, you can reduce such streak noise by enabling the LPF. However, projected images become softened slightly.

Setting of the image displayed during startup or muting

You can display your desired image as the startup screen (or splash screen). Using the menu, you can also use such image as a background that is displayed while the video is muted or no signal is supplied.

- You can capture the images from the COMPUTER1, COMPUTER2, DVI, and HDMI input sources.

Setting procedure

1. Display your desired image.
2. Display the INSTALLATION menu.
3. Select IMAGE CAPTURE by pressing the ▲ or ▼ button.

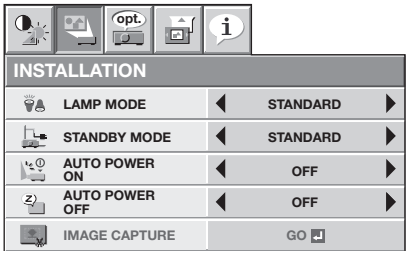

4. Press the ENTER button.
   - Image capture starts and the captured image is displayed.
   - Once you press the ENTER button, you cannot use other functions until the capturing completes.
   - When the resolution of the captured image is lower than XGA, the image is enlarged to XGA when displayed.
   - When the resolution of the captured image is higher than XGA, only the portion within the XGA range is captured.

Important:

- Images with complicated patterns may not be captured. In such cases, change the image to be captured.
- Some images can't be captured correctly because of their signal type. For details, see page 51.
- You can't change the new startup screen back to the original startup screen. (Even when you select RESET ALL in the FEATURE menu, the factory default screen isn't available any longer.) When you want to change the startup screen again, capture another image.
- The captured image will be displayed from the next startup. If the captured image isn't displayed, make sure that the setting of SPLASH SCREEN in the INSTALLATION menu isn't OFF. (See page 30.)
- To display the captured image while the video is muted, set AV MUTE MODE in the INSTALLATION menu to IMAGE. (See page 30.)
- To display the captured image while no signal is supplied, set BACK COLOR in the INSTALLATION menu to IMAGE. (See page 30.)
- In the mute mode, or when no signal is input, it takes longer time to display the captured image.
- You can't set IMAGE CAPTURE when PASSWORD FUNCTION in the FEATURE menu has been set to SPLASH ID SCREEN to enable the password lock.

Password function

This projector is equipped with the password function that is designed for prevention of wrong operation by children and restriction on operation by other than specified users. The password function has 3 modes as follows.

DISPLAY INPUT ..... When the projector is turned on, the startup screen (or splash screen) will appear and stay on the screen until the password is entered. When the password is entered, the startup screen will switch to the regular operation screen.

MENU ACCESS..... All the buttons except for the POWER button on the projector are disabled. (The buttons on the remote control are enabled.) You can use this mode as a measure of prevention of wrong operation by children and restriction on operation by other than specified users.

SPLASH ID SCREEN... IMAGE CAPTURE and SPLASH SCREEN in the INSTALLATION menu become unavailable. SPLASH SCREEN will be set to ON automatically.

To enable the password function:

1. Display the FEATURE menu.
2. Press the ▲ or ▼ button to select PASSWORD FUNCTION.
3. Press the ◀ or ▶ button to change the mode among DISPLAY INPUT ⏎, MENU ACCESS ⏎ and SPLASH ID SCREEN ⏎.
   - When the password has already been set, the mode won't be changed. In such cases, press the ENTER button to cancel the password function and try again.
4. Press the ENTER button.
   - The screen for setting the password function will appear.

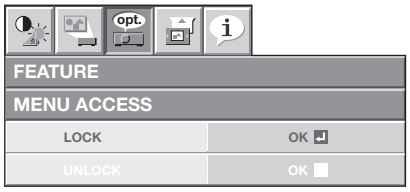

5. Press the ENTER button.
   - The screen for entering a password will appear.

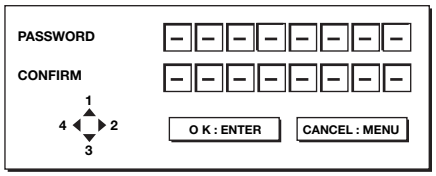

6. Enter a 4 - 8 digit password using the ▲, ▶, ▼ and ◀ buttons on the remote control as shown below.
   (▲=1, ▶=2, ▼=3, ◀=4)
7. Press the ENTER button.
   - To cancel the procedure, press the MENU button.
8. Enter the password again for confirmation using the same steps.
9. Press the ENTER button.
   - If the entered passwords don't match, an error message will appear.
   - To cancel the procedure, press the MENU button.

To cancel the password function:

1. Display the FEATURE menu.
2. Press the ▲ or ▼ button to select PASSWORD FUNCTION.
3. Press the ENTER button.
   - The screen for canceling the password function will appear.

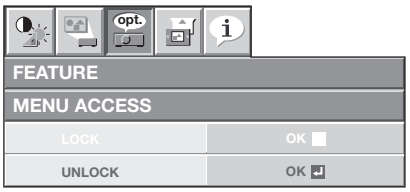

4. Press the ENTER button.
   - The screen for entering the password will appear.

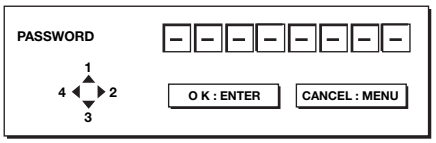

5. Enter a 4 - 8 digit password using the ▲, ▶, ▼ and ◀ buttons on the remote control as shown below.
   (▲=1, ▶=2, ▼=3, ◀=4)
6. Press the ENTER button.
   - If you enter a wrong password, an error message will appear.
   - To cancel the procedure, press the MENU button.

Important:

- Disable the password by pressing the MENU and ENTER buttons on the projector at the same time.

Picture in Picture (PinP)

One of the special features of this projector is the picture-in-picture (PinP) mode. The PinP mode allows you to view the images from different sources at the same time.

- While viewing the image from the COMPUTER1, COMPUTER2, DVI, or HDMI input source, you can display the image from the VIDEO or S-VIDEO input source as a sub image.

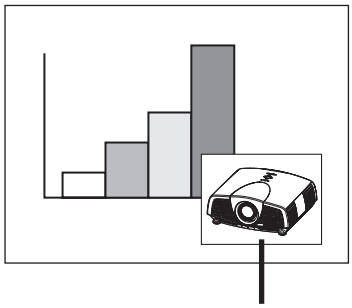

To use the PinP mode

1. Press the PinP button on the remote control.
2. If necessary, select the desired external input source of the sub image by using the VIDEO or S-VIDEO button on the remote control.
3. Press the PinP button again to exit the PinP mode.

To change the position of the sub image:

Press the ◀ or ▶ button on the remote control.

Important:

- The PinP mode is available only when the ASPECT ratio is set to NORMAL.
- The PinP mode isn't available with some input signals. For further information, see page 51.
- When the COMPUTER 1, COMPUTER 2, DVI-D (HDCP) or HDMI button on the remote control is pressed, the PinP mode will be canceled.
- When there is no video signal for sub image, you can't change the display position.
- The motion may not run smoothly in the PinP mode.

Magnifying the displayed image

By pressing the MAGNIFY button on the remote control, you can magnify the image to view the details.

- While viewing the image from the COMPUTER1, COMPUTER2, DVI, or HDMI input source, you can magnify the image.

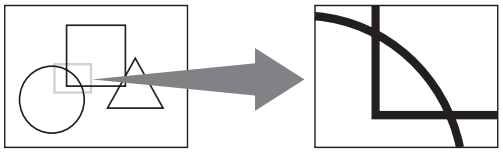

To use the MAGNIFY mode:

1. Press the MAGNIFY button on the remote control.
   - You can select the area to be magnified by pressing the ▲, ▼, ◀, or ▶ button on the remote control.
   - You can change the magnification of the selected area by pressing the + or - button.
2. Press the MAGNIFY button again to exit the MAGNIFY mode.
   - The regular operation screen will appear.

Important:

- The MAGNIFY mode doesn't function with some input signals. For details, see page 51.
- In the MAGNIFY mode, you can't adjust the volume.

Freeze

To stop the motion in the image temporarily (or to display a still image):

Press the FREEZE button on the remote control.

- The image will freeze temporarily.

To resume the motion in the image:

Press the FREEZE button on the remote control again.

Important:

- Do not display a still picture for a long time because the afterimages may persist on the screen.

Mouse remote control

By connecting to personal computer through the USB port, you can operate your computer with the projector remote control.

Projector + computer with USB connector

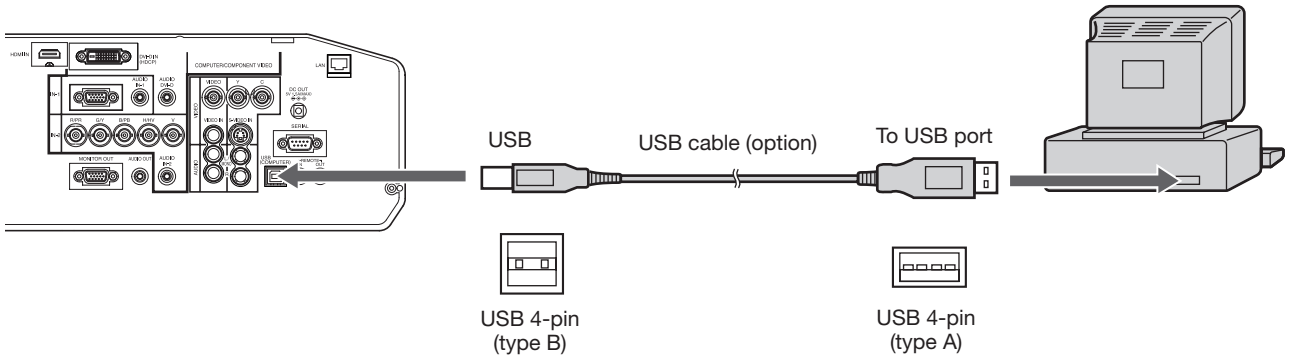

- You can use the mouse remote control function with a computer supporting USB only.
- When the lamp is turned ON, the computer connected with the USB cable may not work correctly. In this case, restart the computer.
- When a computer is connected using a long USB cable, it may not be controlled by the remote control correctly. To extend the cable length, you are recommended to use a repeater.
- You cannot control the computer using the remote control during power standby and for a while after the power is turned on.

Operation

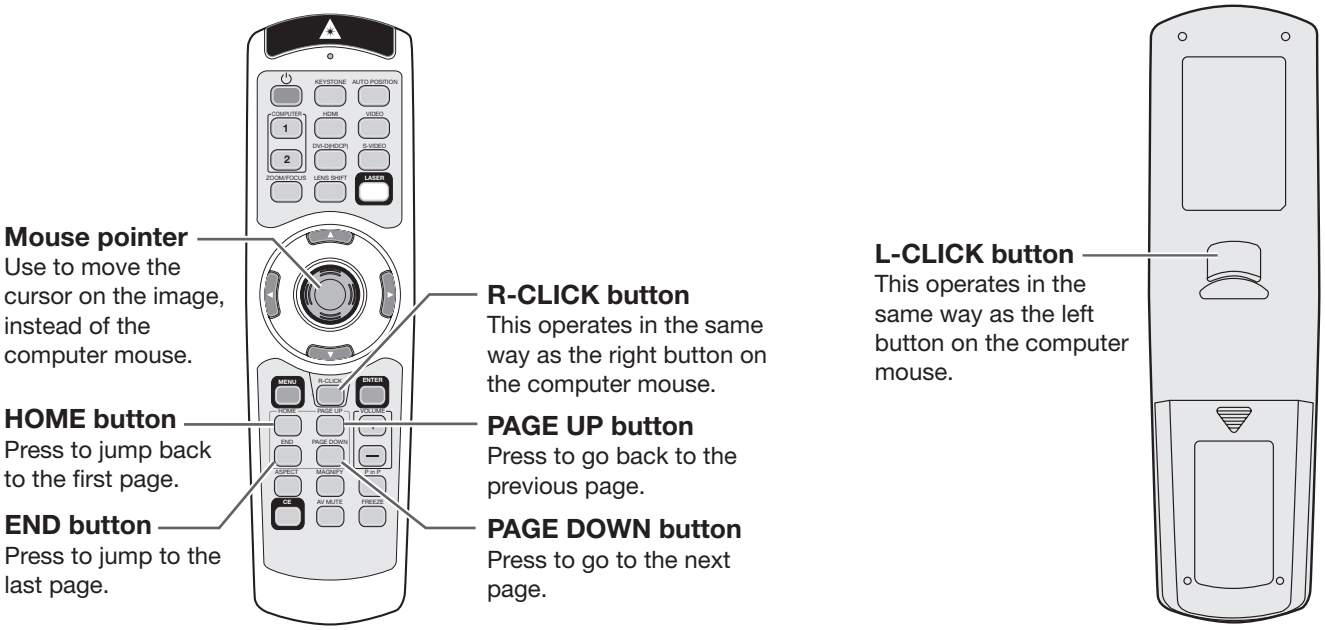

Supervising and controlling by computer

You can supervise and control the projector's operation using a personal computer via a LAN network.

- To supervise and control the projector, install the software "Projector-Control Device Installer *" contained in the attached CD-ROM. For the installation procedure and usage of the software, see "User Manual for LAN Control Utility" contained in the attached CD-ROM.
  *) Functions
  - Setting of the projector's IP address
  - Setting of password, display language, and LAN control
  - PJLink™ certification setting (telnet function)
  - Startup of the controlling /supervising tool (ProjectorView) using the Web browser

Major functions

ProjectorView

The controlling /supervising tool using the Web browser

PJLink™

This projector supports standard protocol PJLink™ for projector control and you can control and monitor projector's operations using the same application among projectors of different models and different manufacturers.

About PJLink™

- To use PJLink™ function, the PJLink™ application software is required.
- For the specifications of PJLink™, access to the Web site of Japan Business Machine and Information System Industries Association (JBMIA). (http://pjlink.jbmia.or.jp/english)
- This projector is fully compliant to the specifications of JBMIA PJLink™ Class 1. It supports all the commands defined by PJLink™ Class 1, and the compliance has been verified with the PJLink™ standard specifications Version 1.0.

Connection

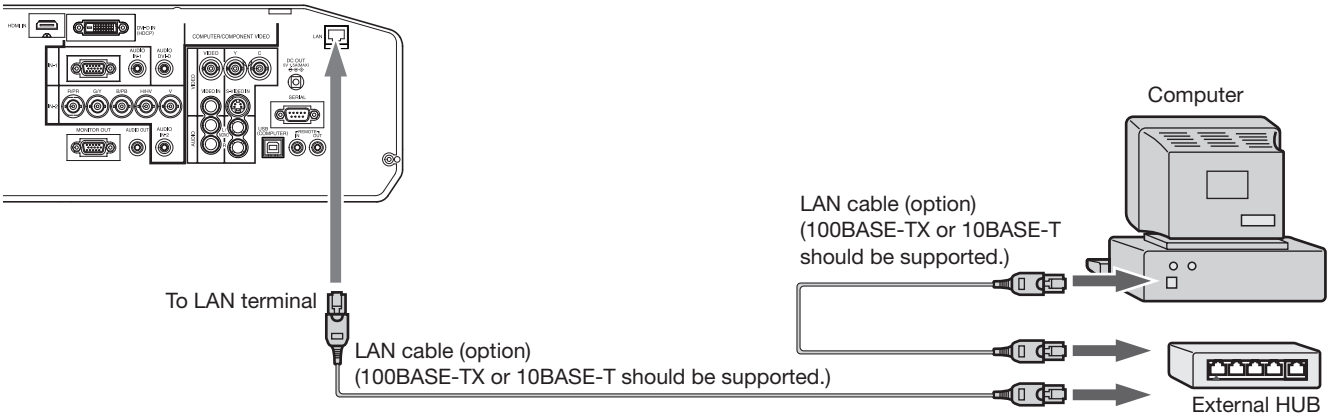

- Use a straight-through category-5 cable for LAN connection.
- Don't touch the metal parts of the LAN connector and LAN cable because static electricity may be discharged from your body, causing damage to the projector.

Using the User Manual

The User Manual for LAN Control Utility is prepared in the Portable Document Format (PDF) in the CD-ROM.

Opening the User Manual:

1. Load the CD-ROM into the CD-ROM drive.
2. Open CD-ROM "XD3200U."
3. Double-click on "MANUAL_LAN.HTML" within the CD-ROM. A language selection list for the User Manual will be displayed.
4. Move the mouse pointer to the desired language and click.

Indicators

This projector has 2 indicators, each of which shows the operation condition of the projector.
The following offer solutions to possible problems. If these problems persist, turn the projector off and consult your dealer.

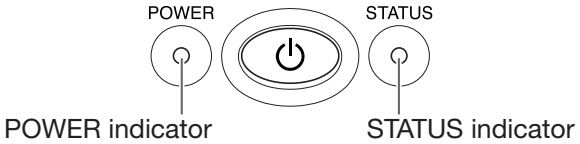

Normal condition

POWER	STATUS	CONDITION	NOTE
Steady red	Off	Stand-by	
	Blinking green	Lamp stand-by for power-off	The power cannot be turned on by pressing the POWER button.
Steady green	Blinking green	Lamp stand-by for power-on	The power cannot be turned off by pressing the POWER button.
	Steady green	The power is on. (Normal condition)	

Abnormal condition

POWER	STATUS	CONDITION	POSSIBLE SOLUTION
Steady green or Steady red	Blinking orange	Abnormal temperature • The ventilation grilles are clogged with dust or dirt. • The room temperature is high.	• Clean the ventilation grilles. • Relocate the projector to a cooler place.
Steady red	Blinking green	The protection circuit is working or the lamp is in an abnormal condition.	• Wait until the STATUS indicator goes out, then press the POWER button. • If the above solution is not effective, replace the lamp.
Steady green	Blinking green/red	Lamp operation time warning. (Total lamp operation time reached 3000 hours*1 while the power was on.)	Replace the lamp. Change with a new lamp if this problem recurs.
Steady red	Blinking red	Lamp operation time warning. (Total lamp operation time reached 3000 hours*1 while the power was off.)	
	Steady red	Lamp operation time warning. (Total lamp operation time reached 4000 hours*1*2 while the power was off.)	
Blinking green/red	Steady or Blinking	Abnormal.	Contact your dealer.

*1: Duration when LAMP MODE of the INSTALLATION menu is set to LOW. When it is set to STANDARD, this duration will be shorted.
*2: When LAMP MODE is set to STANDARD, this duration will be shorted up to 2000 hours.

Replacing the lamp

This projector is equipped with a lamp to project images. This lamp is a consumable. It may burn out or its brightness may decrease during use. In such cases, replace the lamp with a new one as soon as possible. Be sure to replace the lamp with a new lamp separately sold that is exclusive to this projector. Contact your dealer for purchase of the lamp.

Spare lamp	VLT-XD3200LP

Warning:

- Be careful not to drop the lamp fixing screws into the inside of the projector. Don't put a metal piece or flammable object into the projector. Using the projector with any foreign object present inside may result in electric shock or fire. When you can't remove the foreign object from the inside, contact your dealer for removal.
- Be sure to install the lamp securely. When the lamp isn't installed properly, it won't illuminate. Improper installation may also result in fire.
- Don't shake the removed lamp or don't lift it above your face. You may be injured in your eye by flying or falling glass fragments.
- Don't replace the lamp immediately after use because the lamp cover is very hot. You may get burned. Turn off the power using the POWER button. After the lamp goes out, wait about 2 minutes until the intake and exhaust fans for cooling the lamp stop rotating. Then turn off the main power switch, unplug the power cord, and wait at least 1 hour to allow the lamp to cool down enough to the touch.
- Do not touch the lamp directly. It may break and cause injury or burn.

Interval of lamp replacement

The recommended interval of lamp replacement is about 4000 hours[*1*2] of consecutive use. Such interval differs depending on the operating environment and may be shorter than 4000 hours[*1*2]. Decrease in luminescence and/or color brightness indicates that the lamp needs to be replaced. When the lamp operation time exceeds 3000 hours[*1], the indicator will blink alternately between green and red (while the lamp is lit; when the lamp is not lit, the indicator will be lit red only) and the lamp replacement message will appear on the screen for 1 minute everytime the lamp is turned on. When the lamp has been used for about 3800 hours[*1], the replacement message (LAMP EXCHANGE) will appear on the screen for 1 minute every 20 hours[*1] thereafter. **When the lamp operation time exceeds 4000 hours[*1*2], the projector automatically shuts off and can't be used until the lamp is replaced and the lamp operation time is reset.**

*1: Duration when LAMP MODE of the INSTALLATION menu is set to LOW. When it is set to STANDARD, this duration will be shorted.

*2: When LAMP MODE is set to STANDARD, this duration will be shorted to 2000 hours.

Caution:

- Don't remove the lamp for any purpose other than replacement. Unnecessary removal of the lamp may result in a breakdown.
- This projector uses a high-pressure mercury lamp as the light source. The high-pressure mercury lamp may explode or fail to illuminate permanently because of an impact, scratch, or deterioration through use. The period of time until explosion or permanent failure to illuminate varies considerably from lamp to lamp, depending on operation conditions. Therefore, the lamp may explode soon after the start of use.
- The possibility of explosion of the lamp increases if you use it beyond its replacement period. When the instruction of lamp replacement appears, replace it with a new one immediately even if the lamp is still lighting normally.
- When the high-pressure mercury lamp explodes, glass fragments will scatter inside or outside the lamp box and the gas charged inside the lamp will diffuse inside or outside the projector. The gas inside the lamp contains mercury. Be careful not to breathe it or avoid it from entering your eye or mouth. If you should breathe it or if it should enter your eye or mouth, see a doctor immediately.
- In the event that the high-pressure mercury lamp exploded, glass fragments may have been scattered inside the projector. Ask your dealer to replace the lamp and to inspect the inside of the projector. When you clean or replace the lamp by yourself, be sure to hold the handle of the lamp. You may get injured by glass fragments.
- When removing the lamp from the ceiling-mounted projector, use the lamp replacement tray packed with the projector or option lamp to prevent glass fragments from scattering.
- Be sure to use the lamp exclusive to this projector, VLT-XD3200LP. Use of other lamps may cause a failure of the projector.

To replace the lamp:

1. Turn off the main power switch and unplug the power cord.
2. Loosen the screw (a) using a Phillips screwdriver (+), and remove the lamp cover (b).

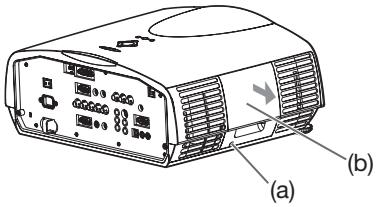

3. Loosen the screws (c) using a Phillips screwdriver (+).

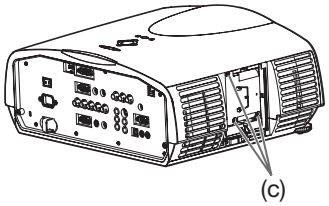

4. Pull the handle.
5. Pull out the lamp box by the handle while holding the projector.

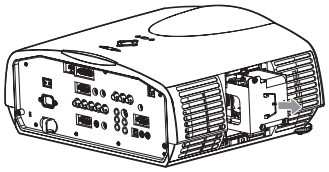

- Pull the lamp box out of the projector slowly. If it is pulled out quickly, the lamp may break scattering glass fragments.
- Do not spill liquid on the removed lamp box or do not place it near any flammable object or where children can reach to prevent injury or fire.

6. Load a new lamp box securely into the projector in the right orientation.

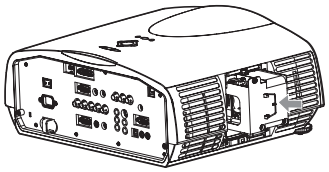

7. Put the handle back to the original position.
   - Make sure that the handle is locked.
8. Tighten up the screws (c) using a Phillips screwdriver (+).

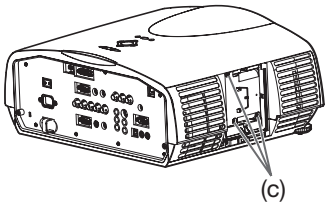

9. Tighten up the screw (a) using a Phillips screwdriver (+) to secure the lamp cover (b).

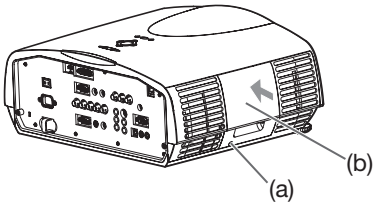

Reset of the lamp operation time

10. Plug the power cord into the wall outlet and turn on the main power switch.
11. Press the ◀, ▶, and POWER button on the projector at the same time.

Important:

- Unless these 3 buttons are pressed at the same time, the lamp operation time isn't reset.
- Make sure that the STATUS indicator blinks twice and the lamp operation time is reset successfully.
- The projector doesn't turn on if the lamp cover isn't attached securely.
- Be sure to reset the lamp operation time whenever you replace the lamp.
- Do not reset the lamp operation time unless you replace the lamp.
- The lamp is fragile. If it is broken, be careful not to cut yourself with glass fragments.

Caution:

- This projector uses a lamp that contains mercury. Disposal of the lamp or the projector with the lamp may be regulated due to environmental considerations. For disposal or recycling information, please contact your local authorities or the Electronic Industries Alliance: www.eiae.org. (For the U.S. only.)

Replacing the lamp (continued)

When removing the lamp from the ceiling-mounted projector

When removing the lamp from the ceiling-mounted projector, use the lamp replacement tray packed with the projector or option lamp to prevent glass fragments from scattering.

- Assemble the lamp replacement tray according to the procedure shown on it.

1. Follow steps 1 to 4 on page 44.

2. Attach the lamp replacement tray to the projector as shown in the figure.

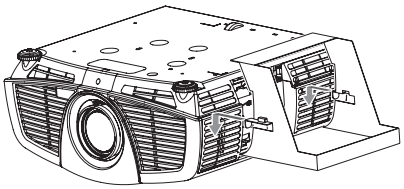

3. Secure the lamp replacement tray on the projector using the tape packed with the tray.

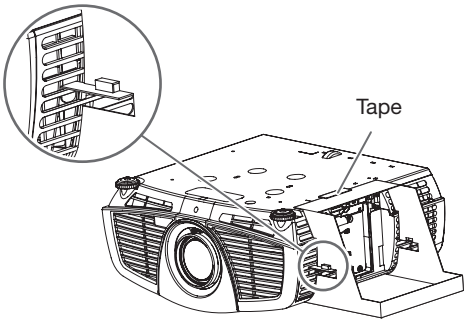

4. Pull out the lamp box by the handle while holding the projector.
   - Hold the lamp replacement tray to prevent glass fragments from scattering.
   - Don't put the lamp directly on the lamp replacement tray because it may fall.

5. Detach the lamp replacement tray together with the removed lamp.

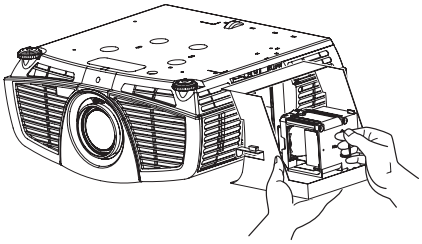

6. Follow steps 6 to 11 on page 44.

Maintenance

Warning:

- Do not use flammable solvents (benzene, thinner, etc.) and flammable aerosols when cleaning the projector body and lens. Flammable substances may ignite causing fire or breakdown while the lamp is illuminating.

Caution:

- Be sure to turn off the lamp and unplug the power cord from the wall outlet before you perform any maintenance on the projector.

Cleaning of the projector and the ventilation slots

Use a soft cloth to clean the projector and the ventilation grilles. When the grilles become dirty, wipe them with a soft cloth dampened with diluted mild detergent, and then wipe them with a dry cloth.

- Clean the inside of the terminal cover frequently as dust is apt to be collected.

To protect the surface of the projector from fading or deteriorating:

- Do not spray insecticide on or inside the projector.
- Do not use benzine or thinner to clean it.
- Do not let rubber or plastic materials contact with projector.

Cleaning of the lens

Use a standard lens-cleaning brush or a piece of lens tissue dampened with lens cleaning fluid. The lens surface is fragile. Use only recommended, nonabrasive lens-cleaning materials. Do not touch the lens with your fingers.

Troubleshooting

Before asking for repair of the projector, check the following. If the symptom persists, stop using the projector, be sure to unplug the power plug, and then contact your dealer.

No image appears on the screen.

<table>
<tr><th>Problem</th><th>Solution</th></tr>
<tr><td>Power can not be turned on.</td><td>• Check whether the indicators are on or off and how they are lightning.
<table>
<tr><th>POWER</th><th>STATUS</th><th>Solution</th></tr>
<tr><td>○
Off</td><td>○
Off</td><td>• Connect the power cord to the projector.
• Plug the power cord into a wall outlet.
• Turn on the main power swich.
• Attach the lamp cover.</td></tr>
<tr><td rowspan="4">☀
Steady red</td><td>○
Off</td><td>• If any objects are blocking the air inlet or outlet grille, remove them and carry out the following.
1. Turn off the main power swich.
2. Make sure that the projector has cooled off.
3. Turn on the main power swich.
4. Press the POWER button.</td></tr>
<tr><td>○ ⇄ ☀
Blinking orange</td><td>• If any objects are blocking the air inlet or outlet grille, remove them.
• Don’t expose the air outlet grilles to hot air emitted from a heating appliance.</td></tr>
<tr><td>○ ⇄ ☀
Blinking green</td><td>• After the STATUS indicator stops blinking, press the POWER button.
• If the main power switch is turned off while the fan is rotating, the lamp may not turn on about 2 minutes when the main power switch is turned on next time.
• The lamp can’t turn on again for 2 minutes after it goes out.
• Press the POWER button several times.</td></tr>
<tr><td>☀
Steady red</td><td>• Replace the lamp. (The lamp is at the end of its life.)</td></tr>
<tr><td>☀ ⇄ ☀
Blinking red/green</td><td>☀
Steady
or
○ ⇄ ☀
Blinking</td><td>• Unplug the power cord from the wall outlet and contact your dealer.</td></tr>
</table></td></tr>
<tr><td>No image appears on the screen.</td><td>• Cancel the AV mute by pressing the AV MUTE button.
• Check that the lens cap is removed.
• It may take about 1 minute for the lamp to light up.
• The lamp fails to light up on rare occasions. In such a case, wait for a few minutes and then try again.
• If the projector was turned off before the lamp was cooled down sufficiently last time, the fan may start rotating and the POWER button may not work after the main power switch is turned on. After the fan stops rotating, press the POWER button to turn back on the POWER indicator.
• Set SCART INPUT in the QUICK MENU or FEATURE menu to OFF. (See pages 27 and 31.)
• Check that the intake vent is clean.
• Check that the cables connected to the external devices are not broken.
• When an extension cable is being used, replace it with the supplied cable for check. When images are displayed correctly, add an RGB signal amplifier to the extension cable.</td></tr>
<tr><td>Power turns off.</td><td>• This problem may occur when the intake vent and/or exhaust vents are blocked. (In such a case, the STATUS indicator brinks orange.)
→ Remove the objects blocking the intake vent and/or exhaust vents and then carry out the following procedure.
1. Wait for the intake fan and/or exhaust fan to stop. (Wait until the STATUS indicator goes out.)
2. Turn off the main power switch.
3. Wait about 10 minutes.
4. Turn on the main power switch.
5. Press the POWER button.
• When the STATUS indicator is steady red, it is indicating that the lamp should be replaced. Replace the lamp in this case.
• Check that AUTO POWER OFF has been set to OFF.
• If the lamp has deteriorated, it may go out after a while it illuminates.</td></tr>
<tr><td>The screen for entering the password appears.</td><td>• PASSWORD FUNCTION in the FEATURE menu has been set to DISPLAY INPUT ⏎ to enable the password lock.
→ Enter the password or contact the person in charge of management of the projector. (See page 38.)</td></tr>
</table>

No image appears on the screen. (continued)

Problem	Solution
"NO SIGNAL" is displayed.	• Turn on the power of the connected device, or check whether there is something wrong with the connected device. • Check whether the external device output signals. (Check this especially when the external device is a notebook computer.) • Check that the cable connected to the external device isn't defective. • Check that the projector is connected to the external device using the correct terminals. • Check that the connected device is correctly selected as the input source. • When an extension cord is being used, replace it with the supplied cable and check whether images are projected correctly. If images are projected correctly, use an RGB signal amplifier along with the extension cord.

Images are not displayed correctly.

Problem	Solution
Projected images are shaking. Projected images are displaced.	• Check that the cable connected to the external device isn't intermittent. • Connect the cable's plug with the external device's connector firmly. • Project an image containing many characters such as a help menu and press the AUTO POSITION button. • Some computers output out-of-spec signals on rare occasion. Adjust the SIGNAL menu. (See pages 35 and 36.)
Projected images are distorted.	• Adjust the projector and the screen so that they are perpendicular to each other. (See page 11.)
Projected images are dark.	• Adjust BRIGHTNESS and CONTRAST in the QUICK MENU or IMAGE menu. (See page 33.) • Replace the lamp. (See page 43.)
Projected images are blurred.	• Adjust the focus. (See pages 16 and 22.) • Clean the lens. • Press the ◀ or ▶ button on the remote control to eliminate flicker. • Adjust TRACKING and FINE SYNC. in the SIGNAL menu. (See page 36.) • Adjust BRIGHTNESS and CONTRAST in the QUICK MENU or IMAGE menu. (See page 33.) • Adjust the projector and the screen so that they are perpendicular to each other. (See page 11.)
White dots are seen on projected images. Black dots are seen on projected images.	• This symptom is normal for a DLP™ projector and is not a malfunction. (A very small number of pixels may stay lit or out, but such symptom is not a malfunction. Pixels of 99.99% or more are effective.)
Rainbow effect is seen on projected images.	• This is due to color breaking noise that occurs in a DLP™ system and is not a malfunction.
Fine streaks are seen on projected images.	• This is due to interference with the screen surface and is not a malfunction. Replace the screen or displace the focus a little. • Vertical or horizontal streak noise may appear on the projected image, depending on the type of the DVD player or game console you use. In such a case, you can reduce such streak noise by enabling the LPF.
Projected images become wavy.	• Connect the plugs of the cables to external devices securely. • Keep the projector away from devices that emit interfering radio waves. • When the keystone adjustment is carried out, the image may not be displayed correctly depending on the type of input signal. This isn't a product malfunction. In this case, readjust the keystone so that the amount of keystone correction is as small as possible.
Hue is not appropriate.	• Check that the cables connected to the external devices are not broken.
Tint in projected images is incorrect.	• Check that COMPUTER INPUT in the SIGNAL menu is correctly set. (See page 32.) • Check that the cable connected to the external device isn't broken.

Images are not displayed correctly. (continued)

Problem	Solution
Different color tint.	• When comparing images projected by two projectors, tints in the displayed images may be different because of variation between their optical components. This is not a malfunction. • When comparing the image projected by this projector with those displayed on the television or PC monitor, tints in the displayed images may be different because of difference in the range of color reproducibility. This is not a malfunction.
Only the motion areas in the images supplied from the computer aren't displayed.	• This is caused by the computer being used. Contact the manufacturer of your computer.
Projected images are obscured.	• Match the output resolution of your computer with the resolution of the projector. For the method to change the output resolution of the computer, contact the manufacturer of your computer. (See page 51.) • Some images and texts appear obscured during the keystone adjustment. In such cases, use the projector without applying the keystone adjustment. (See page 11.)
Noise appears around the image.	• In some images such as DVD, noise may appear around the recorded image. In this case, decrease the setting value of OVER SCAN of the SIGNAL menu. (See page 32.)

Others

Problem	Solution
The exhaust vents emit warm air.	• This air comes out after cooling the inside of the projector. You may feel hot, but this is not a malfunction.
No audio is output.	• Check that the volume isn't set to low. • When the external device is connected with an HDMI cable, set the audio output of the device to PCM output.
The menu can't be used.	• The microcomputers inside the projector may be wrongly operating because of noise. → Turn off the main power, wait about 10 minutes, and turn on the main power again.
"TEMPERATURE!!" is displayed.	• This indication appears when the ambient temperature rises high. When the ambient temperature stays high, the lamp goes out. → Eliminate any causes of the rise in the ambient temperature. • This indication appears when the air inlet or outlet grille is blocked. When they are kept blocked, the lamp goes out. → Remove the objects blocking the air inlet or outlet grille.
The ⊘ mark appears.	• This mark appears when ineffective operation is carried out. This isn't a product malfunction.
The remote control doesn't function easily or at all.	• Check that the batteries are loaded in the remote control or the batteries are not weak. (See page 6.) • Check that the remote control sensor isn't exposed to direct sunlight or fluorescent light. (See page 9.) • Use the remote control within its operation range. (See page 9.) • Use the remote control at least 10 cm away from the projector.
The buttons on the projector (except for the POWER button) don't function.	• PASSWORD FUNCTION in the FEATURE menu has been set to MENU ACCESS ↵ to enable the password lock. → Cancel the password lock or contact the person in charge of management of the projector. (See page 38.)
Abnormal sound is heard.	• Because the color wheel spins at a high speed, metallic sounds may be heard in rare occasions. Such symptom is not a malfunction.

If the following problem occurs after the lamp is replaced, check the following first.

Problem	Solution
The projector does not turn on.	• Fit the lamp cover securely. (See pages 43 and 44.) • Reset the lamp operating time. (See page 44.)
The STATUS indicator blinks.	• Reset the lamp operating time. (See page 44.)

Kensington Lock

This projector has a Kensington Security Standard connector for use with Kensington MicroSaver Security System. Refer to the information that came with the Kensington System for instructions on how to use it to secure the projector. Please contact Kensington Technology Group below.

Kensington Technology Group
2855 Campus Drive
San Mateo, CA 94403, U.S.A.

Phone: +1- (650)572-2700 Fax: +1- (650)572-9675

Specifications

The specifications and outside appearance of the projector are subject to change without prior notice.

Type		DLP™ projector
Model		XD3200U
Display technology		0.7-inch Single chip DMD Pixel 1024 x 768 = 786432 pixels
Projection lens		F 2.0 - 2.4 f= 24.5 - 33.1 mm
Light-source lamp		330 W
Image size (projection distance)		40” min. to 300” max. (projection distance 1.4 to 10.6 m)
Maximum resolution	Computer signal	Maximum resolution: 1600 x 1200 dots (compressed) Panel resolution: 1024 x 768 dots
	Video signal	NTSC/PAL/SECAM/4.43NTSC/PAL-M/PAL-N/PAL-60
	Component signal	480i, 480p, 576i, 576p, 720p, 1080i, 1080p Panel resolution: 1024 x 768 dots
Computer/component video input		[Signal type] [Terminal type] [Line] Analog RGB Mini D-SUB 15-pin 1 Analog RGB 5 BNC 1 Digital RGB DVI-D 24-pin 1
Video input		[Signal type] [Terminal type] [Line] Video input RCA / BNC 1 S-video input S / 2 BNC 1
Audio input		[Signal type] [Terminal type] [Line] RGB/Component Stereo mini jack (ø3.5) 2 Digital RGB Stereo mini jack (ø3.5) 1 Video RCA (L, R) 1 S-video RCA (L, R) 1
HDMI input		[Signal type] [Terminal type] [Line] HDMI HDMI 19-pin 1
Monitor output		[Signal type] [Terminal type] [Line] Analog RGB Mini D-SUB 15-pin 1
Audio output		[Signal type] [Terminal type] [Line] RGB/Component Stereo mini jack (ø3.5) 1
Speaker		10 W Mono Round type ø4.5 cm x 1
Control terminal/others		RS-232C (D-SUB 9-pin), USB, LAN (RJ-45), REMOTE IN/OUT
Operating temperatures		+41°F (+5°C) to +95°F (+35°C)
Rated voltage		AC 100 - 240 V, 50/60 Hz
Power consumption		4.5 A, 430 W During standby: AC 100 - 120 V: 2 W (when STANDBY MODE is STANDARD) 0.4 W (when STANDBY MODE is LOW) AC 220 - 240 V: 2 W (when STANDBY MODE is STANDARD) 0.6 W (when STANDBY MODE is LOW)
Dimensions (not includeing protrusion)		450 mm (W) x 187 mm (H) x 373 mm (D) (projector only) 450 mm (W) x 187 mm (H) x 468 mm (D) (including the terminal cover)
Weight		10.3 kg (projector only), 10.5 kg (including the terminal cover)
Others	S-video input	Luminance signal: Vp-p=1.0 V 75 Ω (negative sync) Chrominance signals: Vp-p=0.286 V 75 Ω (burst signal)
	Video input	Vp-p=1.0 V 75 Ω (negative sync)
	Component video input	YC_BC_R: Vp-p=1.0 V 75 Ω (Y) (negative sync) Vp-p=0.7 V 75 Ω (C_B, C_R)
	Analog input	RGB: Vp-p=0.7 V 75 Ω (negative sync) YC_BC_R: Vp-p=1.0 V (Y) (negative sync) Vp-p=0.7 V (C_B, C_R) HD/CS: TTL-level (negative or positive polarity) VD: TTL-level (negative or positive polarity)
	Digital input (DVI)	DVI-D interface (TMDS single link) with HDCP
	Digital input (HDMI)	HDMI interface (TMDS single link) (Only PCM audio is supported.)
	Audio input	350 mVrms, 10 kΩ or more
	DC OUT	5 V 1.5 A (max)

Replacement part (option/not included in the box)

Spare lamp: VLT-XD3200LP

Option lenses: OL-XD2000SZ, OL-XD2000LZ, OL-XD2000TZ, OL-XD2000FR

Specification of RGB signals in each computer mode of the projector

Signal mode	Resolution (H x V)	Horizontal frequency (kHz)	Vertical frequency (Hz)	Normal mode (H x V)	
TV60, 480i (525i)	720 x 480	15.73	59.94	1024 x 768	*1
TV50, 576i (625i)	720 x 576	15.63	50.00	1024 x 768	*1
1080i60 (1125i60)	1920 x 1080	33.75	60.00	1024 x 576	*1, *2, *3
1080i50 (1125i50)	1920 x 1080	28.13	50.00	1024 x 576	*1, *2, *3
480p (525p)	720 x 480	31.47	59.94	1024 x 768	*1, *2, *3
576p (625p)	720 x 576	31.25	50.00	1024 x 768	*1, *2, *3
720p60 (750p60)	1280 x 720	45.00	60.00	1024 x 576	*1, *2, *3
720p50 (750p50)	1280 x 720	37.50	50.00	1024 x 576	*1, *2, *3
1080p60 (1125p60)	1920 x 1080	67.50	60.00	1024 x 576	*1, *2, *3
1080p50 (1125p50)	1920 x 1080	56.25	50.00	1024 x 576	*1, *2, *3
CGA70	640 x 400	31.47	70.09	1024 x 640	
CGA84	640 x 400	37.86	84.13	1024 x 640	
CGA85	640 x 400	37.86	85.08	1024 x 640	
VGA60	640 x 480	31.47	59.94	1024 x 768	*2, *3
VGA72	640 x 480	37.86	72.81	1024 x 768	
VGA75	640 x 480	37.50	75.00	1024 x 768	
VGA85	640 x 480	43.27	85.01	1024 x 768	
SVGA56	800 x 600	35.16	56.25	1024 x 768	
SVGA60	800 x 600	37.88	60.32	1024 x 768	*2, *3
SVGA72	800 x 600	48.08	72.19	1024 x 768	
SVGA75	800 x 600	46.88	75.00	1024 x 768	
SVGA85	800 x 600	53.67	85.06	1024 x 768	
SVGA95	800 x 600	59.97	94.89	1024 x 768	
XGA60	1024 x 768	48.36	60.00	1024 x 768	*2, *3
XGA70	1024 x 768	56.48	70.07	1024 x 768	
XGA75	1024 x 768	60.02	75.03	1024 x 768	
XGA85	1024 x 768	68.68	85.00	1024 x 768	
SXGA70a	1152 x 864	63.85	70.01	1024 x 768	
SXGA75a	1152 x 864	67.50	75.00	1024 x 768	
SXGA85a	1152 x 864	77.49	85.06	1024 x 768	
WXGA60	1280 x 768	47.78	59.87	1024 x 614	*2
WXGA60a	1280 x 800	49.70	59.81	1024 x 640	*2
WXGA60b	1360 x 768	47.71	60.02	1024 x 578	
WXGA60c	1366 x 768	47.50	59.75	1024 x 576	
WXGA+60	1440 x 900	55.94	59.89	1024 x 640	
SXGA60b	1280 x 960	60.00	60.00	1024 x 768	
SXGA75b	1280 x 960	75.00	75.00	1024 x 768	
SXGA85b	1280 x 960	85.94	85.00	1024 x 768	
SXGA60	1280 x 1024	63.98	60.02	960 x 768	*2, *3
SXGA75	1280 x 1024	79.98	75.02	960 x 768	
SXGA85	1280 x 1024	91.15	85.02	960 x 768	
SXGA+60	1400 x 1050	63.98	60.02	1024 x 768	
	1400 x 1050	65.32	59.98	1024 x 768	*2, *3
SXGA+75	1400 x 1050	82.28	74.87	1024 x 768	
WSXGA+60	1680 x 1050	65.29	59.95	1024 x 640	
MAC13	640 x 480	35.00	66.67	1024 x 768	
MAC16	832 x 624	49.72	74.55	1024 x 768	
MAC19	1024 x 768	60.24	75.02	1024 x 768	
HP75	1024 x 768	62.94	74.92	1024 x 768	
HP72	1280 x 1024	78.13	72.00	960 x 768	
SUN66a	1152 x 900	61.85	66.00	984 x 768	
SUN76a	1152 x 900	71.81	76.64	984 x 768	
SUN66	1280 x 1024	71.68	66.68	960 x 768	
SUN76	1280 x 1024	81.13	76.11	960 x 768	
SGI72	1280 x 1024	76.92	72.30	960 x 768	
SGI76	1280 x 1024	82.01	76.00	960 x 768	
UXGA60	1600 x 1200	75.00	60.00	1024 x 768	*2, *3

*1: The PinP mode, the MAGNIFY mode and IMAGE CAPTURE in the INSTALLATION menu don't function with these signals.
*2: The COMPUTER/COMPONENT VIDEO DVI-D IN (HDCP) terminal is available for these signals.
*3: The HDMI IN terminal is available for these signals.

Specification of RGB signals in each computer mode of the projector (continued)

Important:
- Some computers aren't compatible with the projector.
- The projector's maximum resolution is 1024 x 768 pixels. It may not display images of higher resolutions than 1024 x 768 correctly.
- Images with SYNC on G (Green) signal may jitter.
- Images with SYNC on G (Green) signal may be tinged with green.
- If the resolution and frequency of your computer aren't shown on the table, find the compatible resolution and frequency by changing the resolution of your computer.
- TV60 and TV50 are equivalent to 480i and 576i respectively. When these signals are supplied to the VIDEO IN or S-VIDEO IN terminal, the signal mode is indicated as TV60 or TV50. When they are supplied to the COMPUTER/COMPONENT VIDEO IN terminals, the signal mode is indicated as 480i or 576i.
- This projector doesn't support 480p signals from video devices having 4 lines (R, G, B, CS*) or having 5 lines (R, G, B, H, V).
  * : Composite Sync

Connectors

SERIAL (D-SUB 9-pin)

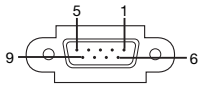

Pin No.	Name	I/O
1	–	–
2	TXD	IN
3	RXD	OUT
4	–	–
5	GND	–
6	–	–
7	–	–
8	–	–
9	–	–

COMPUTER/COMPONENT VIDEO IN-1 (Mini D-SUB 15-pin)

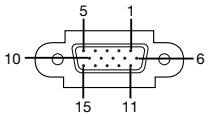

Pin No.	Spec.	Pin No.	Spec.
1	R(RED)/PR/CR	9	DDC 5V
2	G(GREEN)/Y	10	GND
3	B(BLUE)/PB/CB	11	GND
4	GND	12	DDC Data
5	GND	13	HD/CS
6	GND	14	VD
7	GND	15	DDC Clock
8	GND		

COMPUTER/COMPONENT VIDEO DVI-D IN (HDCP) (DVI-D 24-pin)

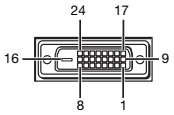

Pin No.	Spec.	Pin No.	Spec.
1	TMDS DATA 2-	13	-
2	TMDS DATA 2+	14	+5V Power
3	TMDS DATA 2 Shield	15	Ground (for +5V)
4	-	16	Hot Plug Detect
5	-	17	TMDS DATA 0-
6	DDC Clock	18	TMDS DATA 0+
7	DDC Data	19	TMDS DATA 0 Shield
8	-	20	-
9	TMDS DATA 1-	21	-
10	TMDS DATA 1+	22	TMDS Clock Shield
11	TMDS DATA 1 Shield	23	TMDS Clock+
12	-	24	TMDS Clock-

HDMI IN (HDMI 19-pin)

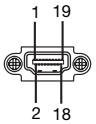

Pin No.	Spec.	Pin No.	Spec.
1	TMDS Data2+	11	TMDS Clock Shield
2	TMDS Data2 Shield	12	TMDS Clock-
3	TMDS Data2-	13	CEC
4	TMDS Data1+	14	–
5	TMDS Data1 Shield	15	SCL
6	TMDS Data1-	16	SDA
7	TMDS Data0+	17	DDC Ground
8	TMDS Data0 Shield	18	+5 V Power
9	TMDS Data0-	19	Hot Plug Detect
10	TMDS Clock+		

Dimension drawings (unit: mm)

Without terminal cover

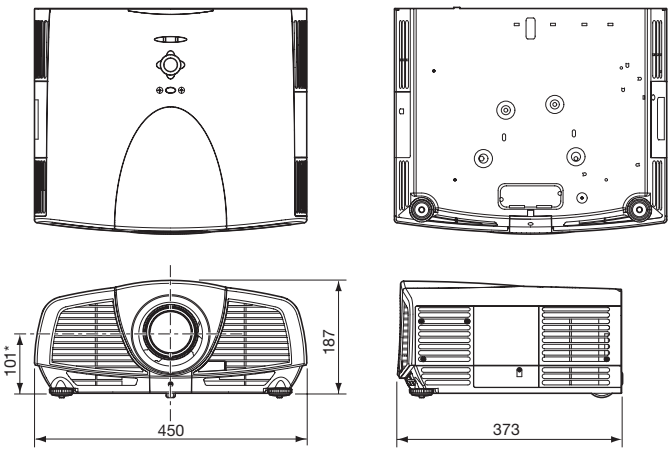

With terminal cover

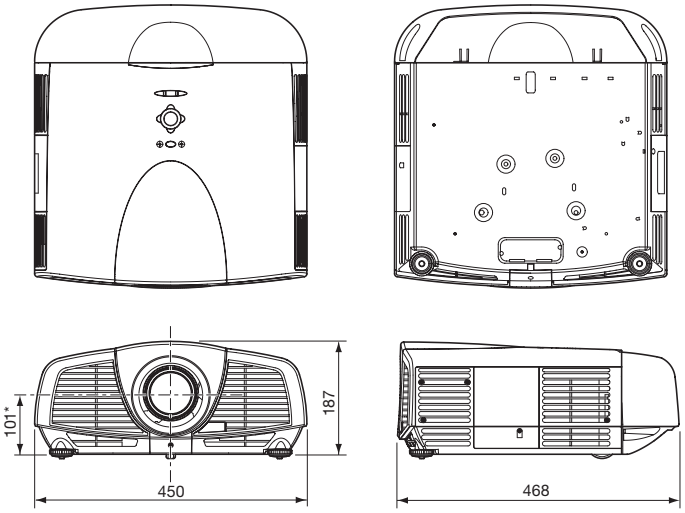

*: Factory-defaults

MITSUBISHI ELECTRIC CORPORATION
1 Zusho Baba, Nagaokakyo-City, Kyoto Japan

A